MILITARY SPECIFICATION SHEET

CONNECTORS, PRINTED CIRCUIT SUBASSEMBLY AND ACCESSORIES, PIN, RIGHT ANGLE, ENVIRONMENTAL RESISTANT, PLUG, ELECTRICAL, POLARIZED FOR PRINTED WIRING BOARDS (.150 SPACING)

(C) This specification inactive for new design after 1 October 1986

This specification is approved for use within the Department of the Air Force and is available for use by all Departments and Agencies of the Department of Defense.

The requirements for acquiring the connector described herein shall consist of this specification and the latest issue of MIL-C-55302.

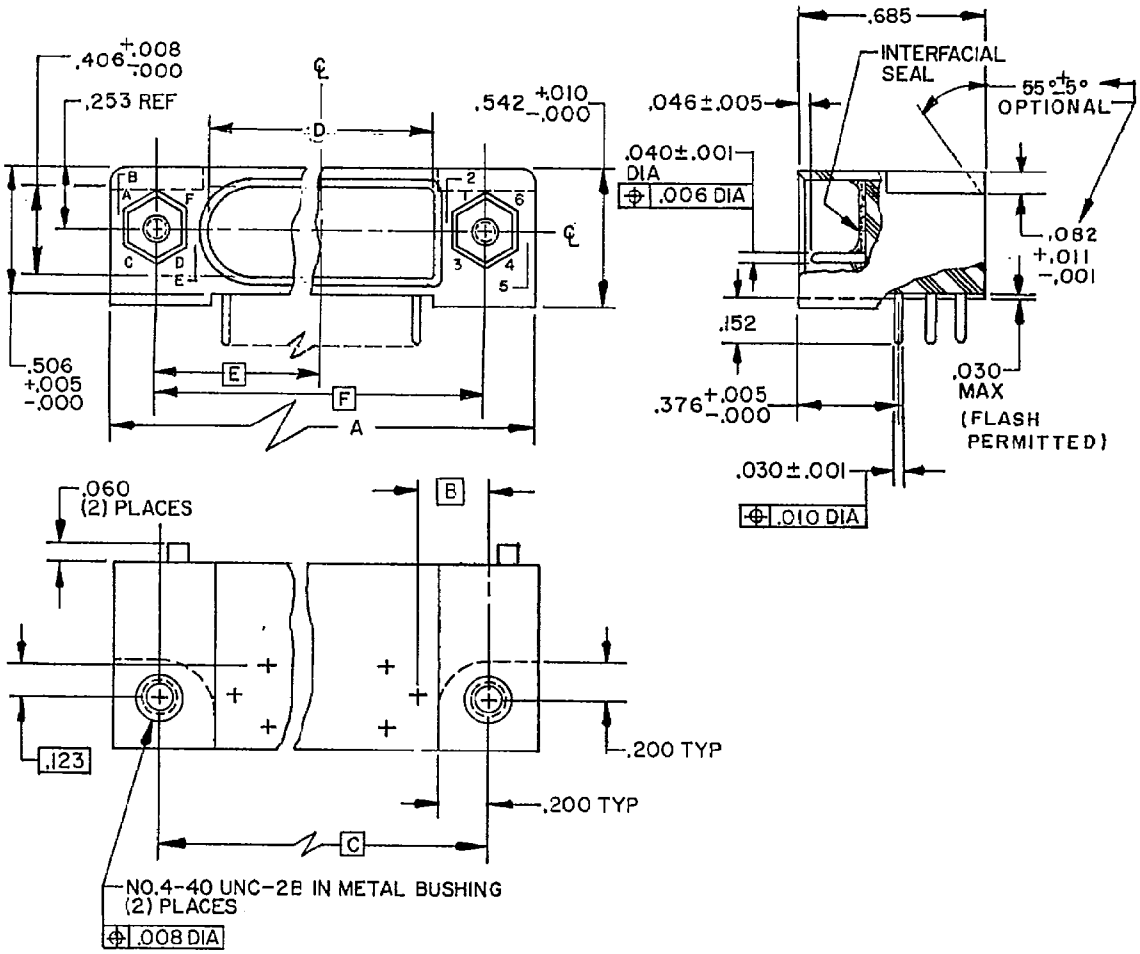

FIGURE 1. Connector, plug, .150 (3.81 mm) contact spacing, pin terminal.

(C) denotes changes

DISTRIBUTION STATEMENT A. Approved for public release; distribution is unlimited.

Inches	mm	Inches	mm	Inches	mm
.001	0.03	.030	0.76	.200	5.08
.005	0.13	.040	1.02	.253	6.43
.006	0.15	.046	1.17	.376	9.55
.008	0.20	.060	1.52	.406	10.31
.009	0.23	.082	2.08	.506	12.85
.010	0.25	.112	2.84	.542	13.77
.011	0.28	.123	3.12	.685	17.40

NOTES:
1. Dimensions are in inches.
2. Metric equivalents are given for general information only.
3. Nominal spacing between any two adjacent pin contacts shall be .150 (TP).
4. Unless otherwise specified tolerance is ±.010 (0.25 mm).
5. For dimensions A through F see table I.
6. Mating connectors provide a total of 36 different polarization positions. Polarization components conforming to MIL-C-55302/78-01 are supplied installed in connectors - A1 and are supplied uninstalled with connector -1P.
7. When properly mated with MIL-C-55302/72 or equivalent this connector has the capability of meeting the environmental requirements of MIL-C-39999, Class T.

FIGURE 1. Connector, plug, .150 (3.81 mm) contact spacing, pin terminal -Continued.

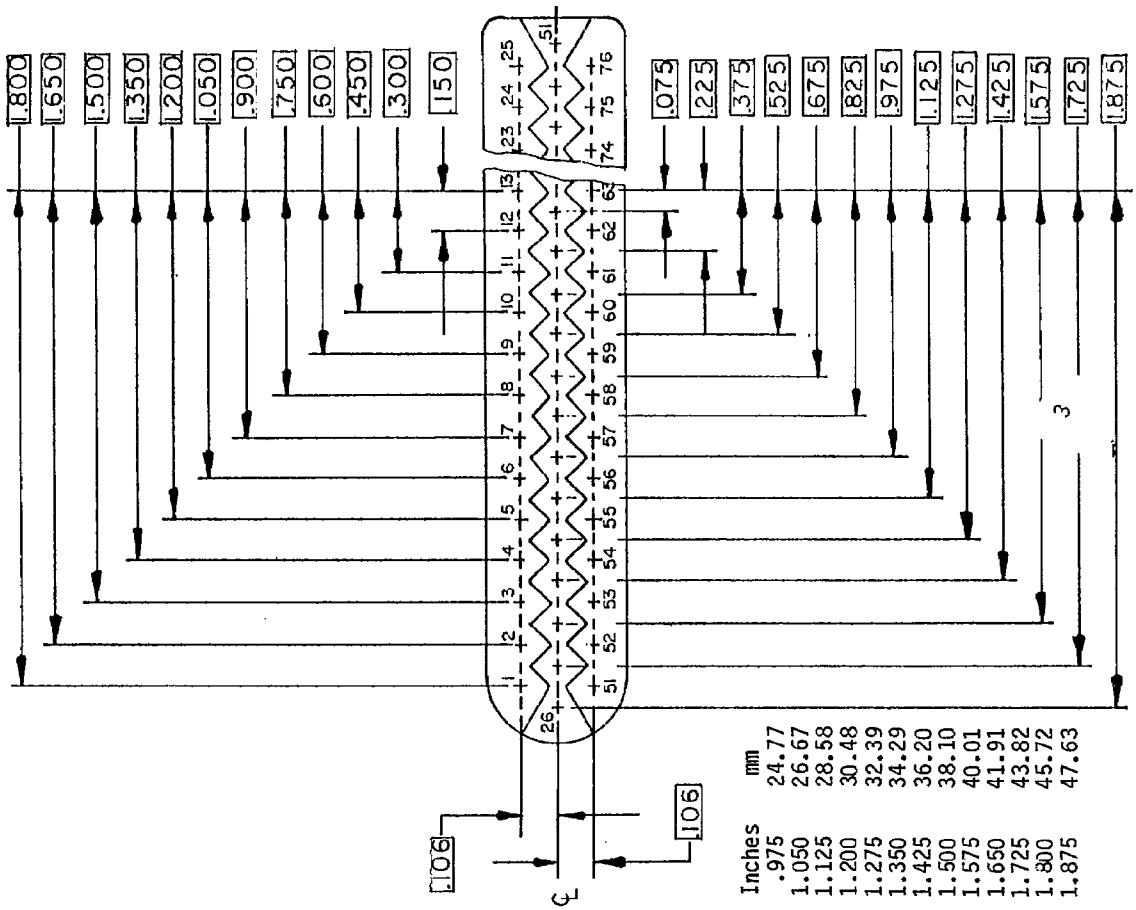

Inches	mm	Inches	mm
.075	1.91	.975	24.77
.106	2.69	1.050	26.67
.150	3.81	1.125	28.58
.225	5.72	1.200	30.48
.300	7.62	1.275	32.39
.375	9.53	1.350	34.29
.450	11.43	1.425	36.20
.525	13.34	1.500	38.10
.600	15.24	1.575	40.01
.675	17.15	1.650	41.91
.750	19.05	1.725	43.82
.825	20.96	1.800	45.72
.900	22.86	1.875	47.63

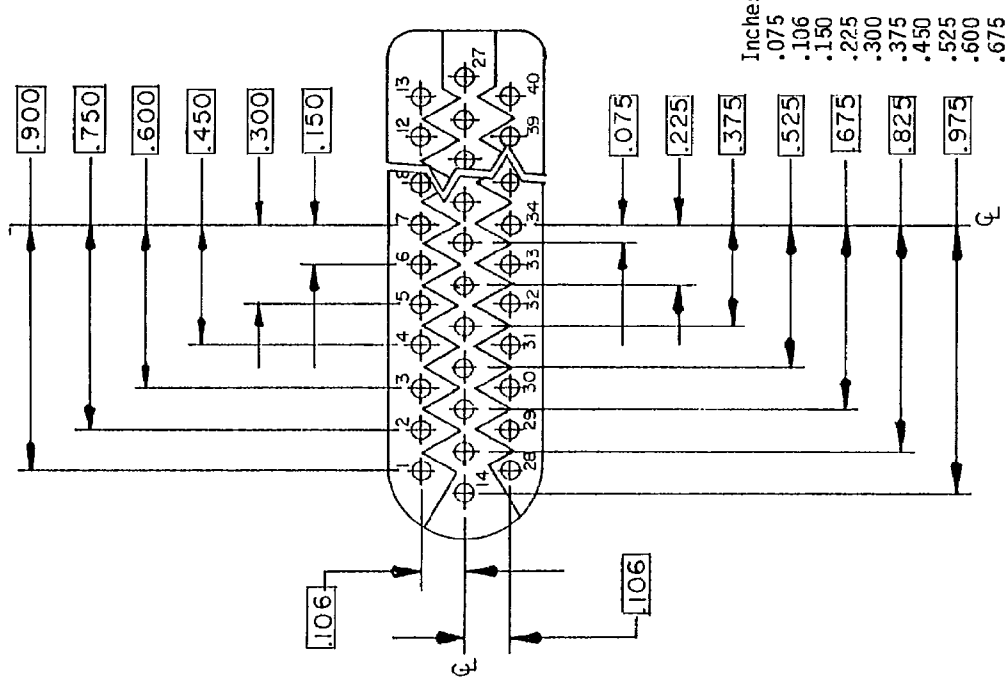

NOTES:
1. Contacts 1 thru 14, and 27 thru 40 (left of page) are identified on the front and rear of the connector per the insert arrangement.
2. Contacts 1 thru 26, and 51 thru 76 (right of page) are identified on the front and rear face of the connector per the insert arrangement.

FIGURE 2. Insert arrangement for .150 (3.81 mm) connector. (Male engaging face)

REQUIREMENTS:

Dimensions and configuration: See figure 1 and table I.

Material: In accordance with MIL-C-55302, except:

Body - reinforced epoxy resin or equivalent.

Interfacial seal - silicon rubber, ZZ-R-765, class IIb, grade 50.

Bushing - Stainless steel AMS 5640 or MIL-S-7720, composition 303, condition A.

© Plating: The contact plating shall be gold in accordance with MIL-G-45204, type II, grade C, class 1 over copper in accordance with MIL-C-14550, class 4.

Contact identification: Contact locations are identified numerically as shown on figure 2.

Mating and unmating: The mating force shall be 35 ±5 pounds for the 40-contact connector and 65 ±5 pounds for the 76-contact connector. The unmating force shall be a minimum of 0.125 times the number of contacts and shall not exceed the measured insertion force.

Contact resistance: With a test current of 5 A dc, the average resistance of all contact pairs measured shall not exceed 0.008 ohm and no individual contact pair shall have a resistance exceeding 0.16 ohm.

Dielectric withstanding voltage:

Sea level: 1,300 V rms, 60 Hz, ac.

High altitude: 350 V rms, 60 Hz, ac.

Contact current rating: 5.0 amperes.

Insert arrangement: See figure 2.

Mating connectors: See MIL-C-55302/72.

Part number:

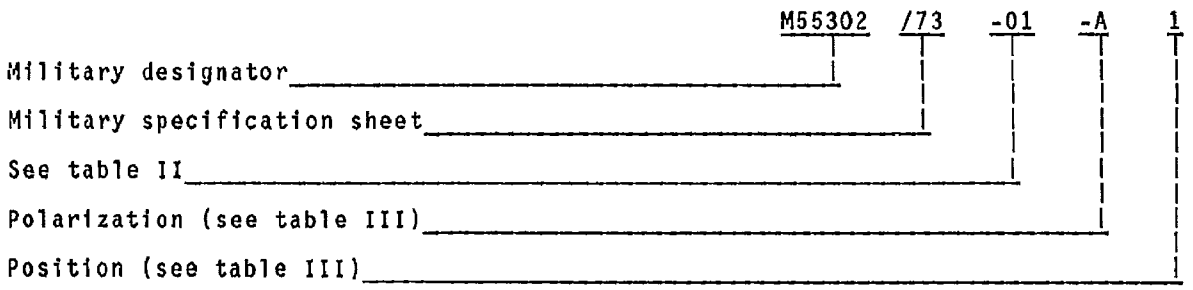

TABLE I. Dash number and dimensions.

Dash number	Dimensions 1/						No. of contacts
	A	B	C	D +.008(.20) -.000	E	F	
01	2.900 (73.66)	.286 (7.26)	2.522 (64.06)	2.134 (54.20)	1.261 (32.03)	2.522 (64.06)	40
02	4.650 (118.11)	.269 (6.83)	4.288 (108.92)	3.924 (99.67)	2.144 (54.46)	4.288 (108.92)	76

1/ Metric equivalent are given for general information only. Millimeters are in parentheses.

TABLE II. Dash number, polarization and position. 1/

Dash number		Dash number	
01	02	01	02
01-A1	02-A1	01-D1	02-D1
01-A2	02-A2	01-D2	02-D2
01-A3	02-A3	01-D3	02-D3
01-A4	02-A4	01-D4	02-D4
01-A5	02-A5	01-D5	02-D5
01-A6	02-A6	01-D6	02-D6
01-B1	02-B1	01-E1	02-E1
01-B2	02-B2	01-E2	02-E2
01-B3	02-B3	01-E3	02-E3
01-B4	02-B4	01-E4	02-E4
01-B5	02-B5	01-E5	02-E5
01-B6	02-B6	01-E6	02-E6
01-C1	02-C1	01-F1	02-F1
01-C2	02-C2	01-F2	02-F2
01-C3	02-C3	01-F3	02-F3
01-C4	02-C4	01-F4	02-F4
01-C5	02-C5	01-F5	02-F5
01-C6	02-C6	01-F6	02-F6
		01-1P Nonpolarized	02-1P Nonpolarized

1/ Refer to figure 3 for polarization indexing.

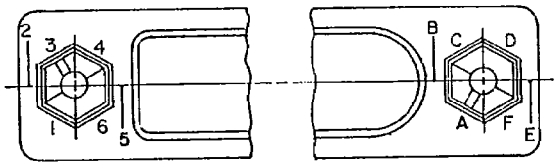

EXAMPLE:
A3 POLARIZATION

FIGURE 3. Polarization indexing.

Custodian:
Air Force - 17

Review activities:
Air Force - 11, 17, 85
DLA - ES

User activity:
Air Force - 19

Preparing activity:
Air Force - 17

Agent:
DLA - ES

(Project 5935-F294-7)