FED SUP CLASS
5965

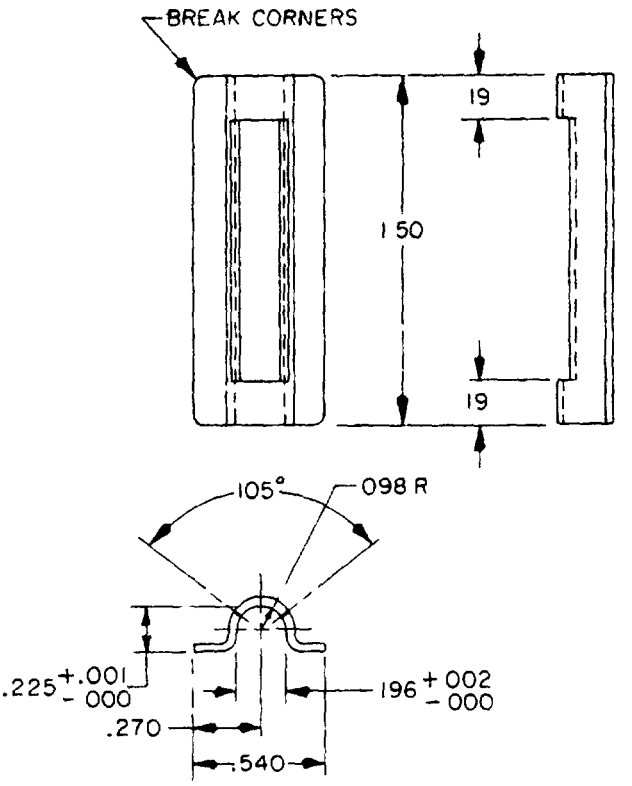

031 TYPE 430 STAINLESS STEEL
BRIGHT ANNEALED

INCHES	MM	INCHES	MM
001	03	196	4 98
002	05	225	5 72
031	76	270	6 86
098	2 49	540	13 72
19	4 83	1.50	38 10

NOTES:
1 Dimensions are in inches
2 Metric equivalents (to the nearest 01 mm) are given for general information only and are based upon 1 inch = 25 4 mm.
3. Unless otherwise specified, tolerances are ±.002(.05 mm) for three place decimals and ±.01(25 mm) for two place decimals.
4 Remove all burrs and sharp edges
5. For design feature purposes, this standard takes precedence over procurement documents referenced herein
6 Reference documents shall be of the issue in effect on date of invitation for bid.

APPROVED 27 Jul 73 REVISED

P A Army-EL Other Cust AF-80 Navy - EC	International interest	TITLE GUIDE BARREL	MILITARY STANDARD MS 75108
Procurement Specification MIL-H-55353		SUPERSEDES SC-D-2216	PAGE 1 OF 1

DD FORM 1 SEP 63 672 (Coordinated) PREVIOUS EDITIONS OF THIS FORM ARE OBSOLETE 5965-0128-6

User activities Army Navy - EC, AS, SH Air Force-11

Reviewer activities Army Navy Air Force -11,13

This military standard is mandatory for use by all Departments and Agencies of the Department of Defense. Selection for all new engineering and design applications and for repetitive use shall be made from this document.

To detach this form, cut along this line

SPECIFICATION ANALYSIS SHEET

Form Approved
Budget Bureau No 22-R255

INSTRUCTIONS This sheet is to be filled out by personnel either Government or contractor involved in the use of the specification in procurement of products for ultimate use by the Department of Defense This sheet is provided for obtaining information on the use of this specification which will insure that suitable products can be procured with a minimum amount of delay and at the least cost Comments and the return of this form will be appreciated Fold on lines on reverse side staple in corner, and send to preparing activity Comments and suggestions submitted on this form do not constitute or imply authorization to waive any portion of the referenced document(s) or serve to amend contractual requirements

SPECIFICATION MS75108 GUIDE BARREL

ORGANIZATION

CITY AND STATE

CONTRACT NUMBER

MATERIAL PROCURED UNDER A

☐ DIRECT GOVERNMENT CONTRACT ☐ SUBCONTRACT

1 HAS ANY PART OF THE SPECIFICATION CREATED PROBLEMS OR REQUIRED INTERPRETATION IN PROCUREMENT USE?

A GIVE PARAGRAPH NUMBER AND WORDING

B RECOMMENDATIONS FOR CORRECTING THE DEFICIENCIES

2 COMMENTS ON ANY SPECIFICATION REQUIREMENT CONSIDERED TOO RIGID

3 IS THE SPECIFICATION RESTRICTIVE?

☐ YES ☐ NO *(If "yes" in what way?)*

4 REMARKS *(Attach any pertinent data which may be of use in improving this specification If there are additional papers, attach to form and place both in an envelope addressed to preparing activity)*

SUBMITTED BY *(Printed or typed name and activity - Optional)*

DATE

DD FORM 1 JAN 66 1426

REPLACES EDITION OF 1 OCT 64 WHICH MAY BE USED

ESC-FM 1068-68

FOLD

Department of the Army
Headquarters
U.S.Army Electronics Command
Fort Monmouth, New Jersey 07703

POSTAGE AND FEES PAID

OFFICIAL BUSINESS

Commanding General
U.S.Army Electronics Command
ATTN. AMSEL-RD-ED
Fort Monmouth, New Jersey 07703

To detach this form, cut along this line

FOLD