FED SUP CLASS
5965

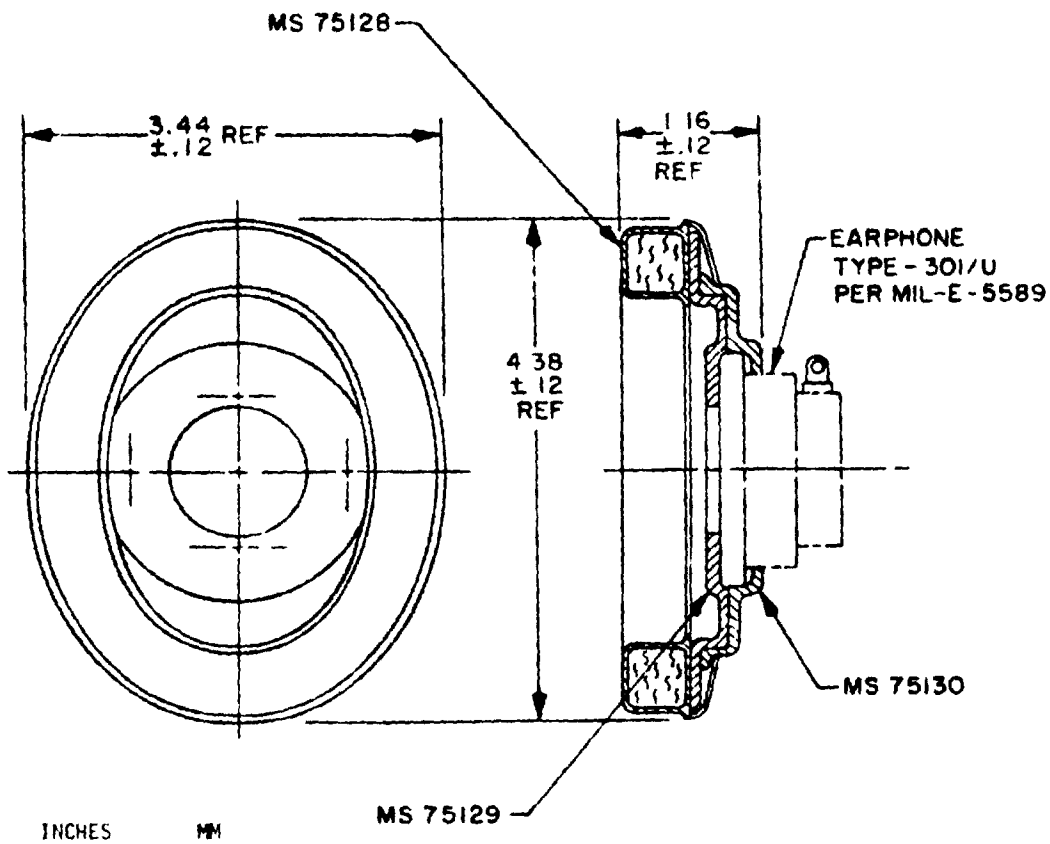

INCHES	MM
12	3.05
1 16	29 46
3 44	87 38
4 38	111.25

NOTES
1 Dimensions are in inches.
2. Metric equivalents (to the nearest 01 mm) are given for general information only and are based upon 1 inch = 25.4 mm
3. For design feature purposes, this standard takes precedence over procurement documents referenced herein
4 Reference documents shall be of the issue in effect on date of invitation for bid.
5. Retainer material shall be molding plastic, ABS, rigid, L - P - 1183, Type V, color black.
(B) 6. Cup material and color shall be the same as retainer.
7. Cushion material shall be film flexible vinyl, MIL-F-10400, Class 2, color, black.

(B) DENOTES CHANGE

REVISED (A) OCT 79 (B) 25 MAR 82

APPROVED 27 JULY 73

P A ARMY-CR Other Cust AF 85 NAVY EC	International Interest	TITLE EARPHONE ASSEMBLY	MILITARY STANDARD MS 75127
Procurement Specification MIL-H-55353		SUPERSEDES	PAGE 1 OF 1

DD FORM 1 MAY 73 672 (Coordinated) PREVIOUS EDITIONS OF THIS FORM ARE OBSOLETE

5965-0180

This military standard is approved for use by Departments and Agencies of the Department of Defense. Selection for all new engineering and design applications and for repetitive use made from this document when applicable

Review activities Army - Navy Air Force 11, 13

User activities Army Navy Air Force MC AS, SH 11