FED SUP CLASS
5965

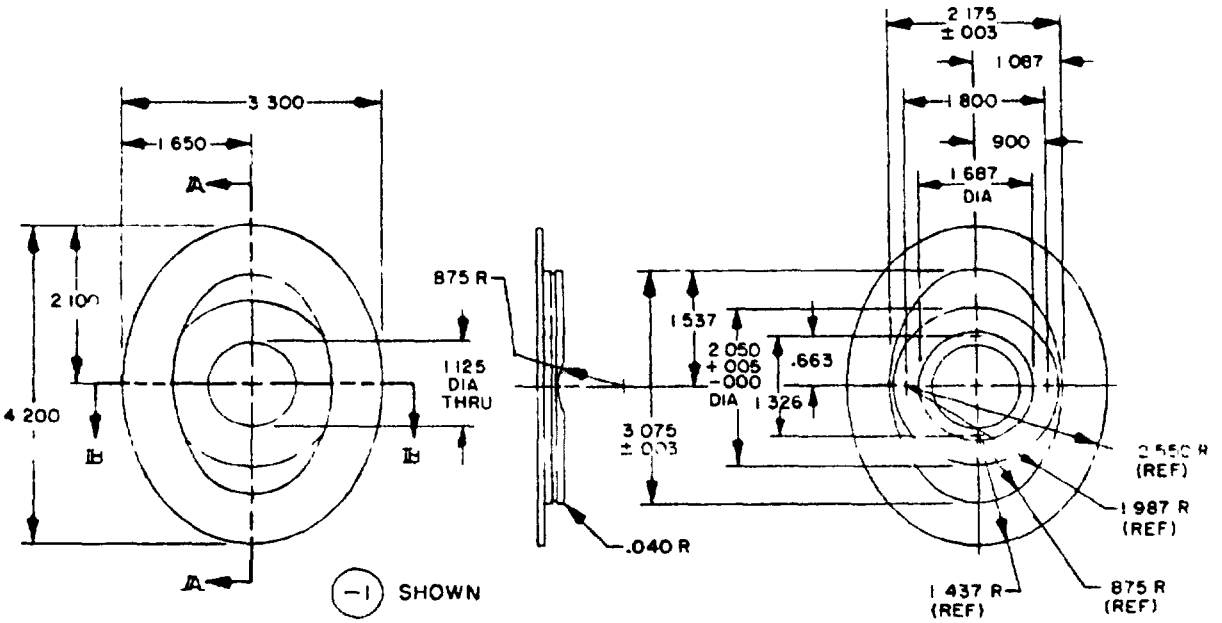

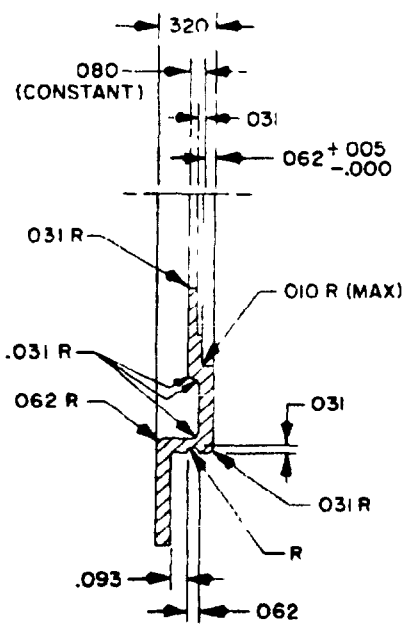

PARTIAL SECTION A-A

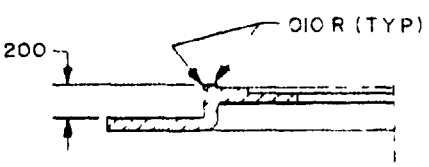

PARTIAL SECTION B-B

(B) DENOTES CHANGE

APPROVED 27 JULY 73 REVISED (A) 24 OCT 79 (B) 25 MAR 80

User activities Army - MC, AS, SH
Navy -
Air Force - 11

Review activities Army -
Navy
Air Force - 11, 13

This military standard is approved for use by all Departments and Agencies of the Department of Defense. Selection for all new engineering and design applications and for repetitive use shall be made from this document when applicable

P A ARMY-CR Other Cust AF-85 NAVY - EC	International interest	TITLE EARPHONE RETAINER	MILITARY STANDARD MS 75129
Procurement Specification MIL H-55353		SUPERSEDES	PAGE 1 OF 2

DD FORM 1 MAY 672 (Coordinated) PREVIOUS EDITIONS OF THIS FORM ARE OBSOLETE

5965 01 PB

FED SUP CLASS
5965

INCHES	MM	INCHES	MM	INCHES	MM	INCHES	MM	INCHES	MM
.003	08	.080	2.03	.875	22.23	1.537	39.04	2.100	53 34
005	13	093	2 36	900	22 86	1 650	41.91	2 175	55.25
.010	25	.125	3.18	1 087	27.61	1.687	42.85	2 550	64 77
.031	.79	.200	5.08	1.125	28 58	1.800	45.72	3.075	78.11
040	1 02	320	8.13	1 326	33 68	1.987	50.47	3.300	83 82
062	1 57	663	16 84	1 437	36 50	2 050	52.07	4 200	106 68

NOTES
1 Dimensions are in inches
2 Metric equivalents (to the nearest 01 mm) are given for general information only and are based upon 1 inch = 25 4 mm
3 Tolerance is - 005 (13 mm)
4 For design feature purposes, this standard takes precedence over procurement documents referenced herein
5 Reference documents shall be of the issue in effect on date of invitation for bid
(B) 6 Molding Plastics ABS, rigid L - P - 1183, Type V, color black.

APPROVED 27 JULY 73 REVISED (B) FOR CHANGES SEE PAGE 2

P A ARMY-CR Other Cust AF-85 NAVY-EC	International interest	TITLE EARPHONE RETAINER	MILITARY STANDARD MS75129
MIL-H-55353		UPERSEDES	PAGE 2 OF 2

DD FORM 1 MAY 672 (Coordinated) PREVIOUS EDITIONS OF THIS FORM ARE OBSOLETE

User activities Army Navy MC, AS SH Air Force - 11
Review activities Army Navy Air Force 11, 13
This military standard is approved for use by Department and Agencies of the Department of Defense. Selection to all new engineering in design applications and for repetitive use shall be made from this document when applicable