FED. SUP CLASS
5965

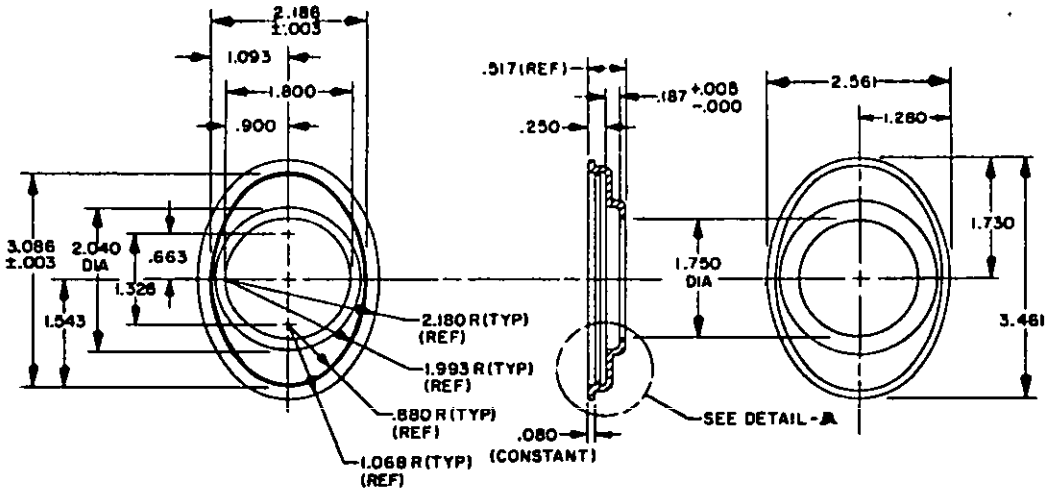

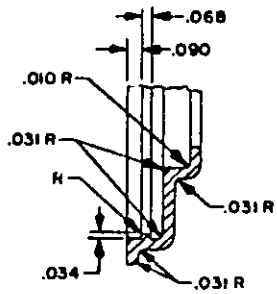

DETAIL-A

INCHES	MM	INCHES	MM	INCHES	MM	INCHES	MM	INCHES	MM
.003	.08	.080	2.03	.880	22.35	1.730	44.20	2.186	55.52
.005	.13	.090	2.29	1.068	27.13	1.750	44.45	2.561	65.05
.010	.25	.187	4.75	1.093	27.76	1.800	45.72	3.086	78.38
.031	.79	.250	6.35	1.280	32.51	1.993	50.62	3.461	87.91
.034	.86	.517	13.13	1.326	33.68	2.040	51.82		
.068	1.73	.663	16.84	1.543	39.19	2.180	55.37		

NOTES:
1. Dimensions are in inches.
2. Metric equivalents (to the nearest .01 mm) are given for general information only and are based upon 1 inch = 25.4 mm.
3. Tolerance is ±.005(.13 mm).
4. For design feature purposes, this standard takes precedence over procurement documents referenced herein.
5. Reference documents shall be of the issue in effect on date of invitation for bid.
6. (A) Molding Plastic ABS, rigid, L-P-1183, Type V, color black.

(A) DENOTES CHANGE

APPROVED 17 Apl 73. REVISED (A) 25 MAR 82

User activities: Army Navy-MC,AS,SH Air Force -11

Reviewer activities: Army Navy Air Force-11,13

This military standard is mandatory for use by all Departments and Agencies of the Department of Defense. Selection for all new engineering and design applications and for repetitive use shall be made from this document.

P.A. Army-CR Other Cust AF-85 Navy - EC	International Interest	TITLE CUP, EARPHONE	MILITARY STANDARD MS 75130
Procurement Specification MIL-H-55353		SUPERSEDES:	PAGE 1 OF 1

DD FORM 1 SEP 63 672 (Coordinated) PREVIOUS EDITIONS OF THIS FORM ARE OBSOLETE.

5965-0179