INCH-POUND

MIL-DTL-5589E
30 March 1999
SUPERSEDING
MIL-E-5589D
22 June 1995

DETAIL SPECIFICATION

EARPHONE, (EXTENDED RANGE), H-301/U

This specification is approved for use by all Departments and Agencies of the Department of Defense.

1. SCOPE

1.1 Scope. This specification covers a dynamic earphone having an impedance of 300 ohms with extended frequency and a flat response (see 6.1).

2. APPLICABLE DOCUMENTS

* 2.1 General. The documents listed in this section are specified in sections 3 and 4 of this specification. this section does not include documents cited in other sections of this specification or recommended for additional information or as examples. While every effort has been made to ensure the completeness of this list, document users are cautioned that they must meet all specified requirements documents cited in sections 3 and 4 of this specification, whether or not they are listed.

2.2 Government documents.

2.2.1 Specifications, standards, and handbooks. The following specifications, standards, and handbooks form a part of this document to the extent specified herein. Unless otherwise specified, the issues of these documents are those listed in the issue of the Department of Defense Index of Specifications and Standards (DoDISS) and supplement thereto, cited in the solicitation (see 6.2).

SPECIFICATION

FEDERAL

A-A-52024	-	Compasses, Magnetic: Surveyor's and Transit, Pocket; with Optional Ball and Socket Joint or Ball and Socket Head, and Jacob's Staff.

STANDARDS

DEPARTMENT OF DEFENSE

Beneficial comments (recommendations, additions, deletions) and any pertinent data which may be of use in improving this document should be addressed to: Defense Supply Center, Columbus, 3990 East Broad Street, Columbus, OH 43216-5000, by using the Standardization Document Improvement Proposal (DD Form 1426) appearing at the end of this document or by letter.

AMSC N/A FSC 5965
DISTRIBUTION STATEMENT A. Approved for public release; distribution is unlimited.

MIL-STD-130	-	Identification Marking of U.S. Military Property.
MIL-STD-202	-	Test Methods for Electronic and Electrical Component Parts.
MIL-HDBK-454	-	General Guidelines for Electronic Equipment.
MIL-STD-810	-	Environmental Test Methods and Engineering Guidelines.

(Unless otherwise indicated, copies of federal and military specifications, standards, and handbooks are available from the Defense Automated Service, Building 4D (DPM-DoDSSP)), 700 Robbins Avenue, Philadelphia, PA 19111-5094.)

* 2.3 Non-Government publications. The following documents form a part of this document to the extent specified herein. Unless otherwise specified, the issues of the documents which are DoD adopted are those listed in the issue of the DoDISS cited in the solicitation. Unless otherwise specified, the issues of documents not listed in the DoDISS are the issues of the documents cited in the solicitation (see 6.2).

AMERICAN NATIONAL STANDARDS INSTITUTE (ANSI)

S1.12	-	Laboratory Standard Microphones, Specifications for.
S3.7	-	Coupler Calibration of Earphones, Method for the.
Z540-1	-	Calibration Laboratories and Measuring and Test Equipment, General Requirements.

(Application for copies should be addressed to the American National Standards Institute, 11 West 42nd Street, New York, NY 10036.)

AMERICAN SOCIETY FOR TESTING AND MATERIALS (ASTM)

ASTM D 484	-	General Requirement for Stainless and Heat-Resisting Wrought Steel Product (Except Wire). (DoD adopted)

(Application for copies should be addressed to the American Society for Testing and Materials, 1916 Race Street, Philadelphia, PA 19103.)

JOINT INDUSTRY STANDARD

ANSI/IPC J-STD-001 - Requirements for Soldered Electrical and Electronic Assemblies

(DoD activities may obtain copies of American National Standard Institute J-STD-001 from the Defense Printing Service Detachment Office, Building 4D, Customer Service, 700 Robbins Avenue, Philadelphia, PA 19111-5094. Private sector and other Government Agencies may purchase copies from the institute for Interconnecting and Packaging Electronic Circuit (IPC, Inc.), 2215 Sanders Road, Suite 200 South, Northbrook, IL 60062.)

(Non-Government standards and other publications are normally available from the organizations that prepare or distribute the documents. These documents also may be available in or through libraries or other informational services.)

2.4 Order of precedence. In the event of a conflict between the text of this document and the references cited herein, the text of this document takes precedence. Nothing in this document, however, supersedes applicable laws and regulations unless a specific exemption has been obtained.

3. REQUIREMENTS

3.1 First article. When specified (see 6.3), a sample shall be subjected to first article inspection (see 6.3) in accordance with 4.4.

3.2 Material. Materials shall be used, which will enable the earphones to meet the performance requirements of this specification. Acceptance or approval of any constituent material shall not be construed as a guaranty of the acceptance of the finished product.

3.2.1 Case. Case material shall be of steel or other suitable magnetic shielding material, capable of withstanding headband yoke pressure. The earphone shall have a black finish.

3.2.2 Insulating and impregnating compounds. All insulating and impregnating compounds applied including varnishes, waxes and the like, shall be suitable for each particular application. Compounds shall adequately preserve the dielectric strength of the insulation to which it is applied. The compound used (either in the state of its original application or as a result of aging) shall not show any injurious effect upon the insulation it is to protect, and shall not cause corrosion or deterioration of adjacent metal or plastic parts.

3.2.3 Magnetic stability. The materials used in the magnetic circuit shall be processed and assembled so that the earphone element will suffer no degradation in performance over long periods of use or storage.

3.2.4 Cementing compounds. Any cementing compound used in the construction of the earphone shall show no evidence of loosening nor have other detrimental effects.

* 3.2.5 Fungus resistant. The manufacturer shall verify by certification that all materials for fabrication of earphones covered by this specification are fungus resistant. The manufacturer may refer to MIL-HDBK-454 Guideline 4 (Fungus-Inert Materials). When no certification is provided or nutrient materials are used, the manufacturer shall test them prior to fabrication of the earphones as specified in 4.6.15. There shall be no evidence of fungus growth on the external surfaces.

* 3.2.6 Soldering. The materials and methods used for soldering shall conform to Class 2 of ANSI/IPC J-STD-001.

3.3 Design. Earphones shall be designed in accordance with figure 1. Earphones shall be inherently stable mechanically and acoustically.

3.3.1 Diaphragm. The earphone shall be constructed to have equalization of pressure on both sides of the diaphragm when subjected to changes in ambient pressure as low as 3.4 inches (86.36 mm) of mercury.

3.3.2 Weight. The weight of each earphone shall not be greater than 3.5 ounces.

3.3.2.1 Transformers. The use of a transformer in the earphone is permissible; however, when a transformer is used it shall be inside the earphone case and included as part of the total weight.

3.3.3 Cap. The earphone cap shall be nonremovable.

3.3.4 Stay-cord anchor. At the option of the manufacturer, the earphone may be provided with a nonferrous metal eye to permit anchoring of the tie or stay cord of the cordage, as shown on figure 1.

3.4 Performance characteristics.

3.4.1 Frequency response. When measured as specified in 4.6.2, the frequency response at 1,000 hertz (Hz) shall be between 106 decibels (dB) and 112 dB above a reference level of 0.0002 dyne per

square centimeter with 1 milliwatt root mean square (rms) power. The frequency response shall not deviate from the 1,000 Hz response by more than the values shown in table I.

TABLE I. Frequency response deviations.

Frequency (Hz)	Deviations (dB)	
	Min	Max
100- 2,500	-3	+3
2,501 - 3,000	-3	+5
3,001 - 7,000	-7	+6

3.4.2 Impedance. When measured as specified in 4.6.3, the impedance of the earphone element at 1,000 Hz shall be 300 ohms ±30 ohms.

3.4.3 Harmonic distortion. When measured as specified in 4.6.4, the ring harmonic distortion in the acoustic output of the earphone shall not exceed 5 percent at 200 Hz and shall not exceed 4 percent at any fundamental frequency between 400 Hz and 7,000 Hz.

3.4.4 Dielectric withstanding voltage. When tested as specified in 4.6.5, there shall be no arcing or breakdown of the insulation.

3.4.5 Stray magnetic field. When measured as specified in 4.6.6, the deflection of the magnetic compass shall not be greater than 7 ½ degrees.

3.4.6 Endurance. When tested as specified in 4.6.7, there shall be no audible rattles or other signs of failure, and the frequency response shall not vary more than ±3 dB from the initial reading recorded in 3.4.1.

3.4.7 Moisture resistance. When tested as specified in 4.6.8, the frequency response, harmonic distortion, and dielectric withstanding voltage shall be as specified in 3.4.1, 3.4.3, and 3.4.4 respectively. There shall be no loosening or deformation of parts or other damage.

3.4.8 Barometric pressure (reduced). When earphones are tested as specified in 4.6.9, the frequency response shall not vary more than ±3 dB from the initial reading recorded in accordance with 3.4.1.

3.4.9 Thermal shock. When earphones are tested as specified in 4.6.10, the frequency response shall not vary more than ±3 dB from the initial reading recorded in accordance with 3.4.1.

3.4.10 Vibration, high frequency. When earphones are tested as specified in 4.6.11, there shall be no structural failure or other defects, and the frequency response shall not vary more than ±3 dB from the initial reading recorded in accordance with 3.4.1.

3.4.11 Shock. The earphones shall exhibit no damage or failure from breaking, cracks, deformation or loosening of parts when tested as specified in 4.6.12. The frequency response of the earphone shall not vary more than ±3 dB from the initial reading recorded in accordance with 3.4.1.

3.4.12 Salt spray (corrosion). After exposure the earphones shall be tested as specified in 4.6.13c. Within 3 hours after the drying period, the earphones shall be tested as specified in 4.6.13e. There shall be no evidence of corrosion or pitting which in anyway interferes with electrical or mechanical performance.

3.4.13 Acoustic quality. When earphones are tested as specified in 4.6.14, there shall be no buzzing rattling, nor other spurious sounds in the acoustic output of the earphone.

3.5 Marking. Earphones shall be marked in accordance with MIL-STD-130 with the type designation and manufacturer's code symbol or name.

3.6 Workmanship. Earphones shall be processed in such a manner as to be uniform in quality and shall be free from loose parts, excess solder, sharp edges, burrs, flaking, scratches, peeling, metal chips and foreign material. Soldering, impregnation of coils, plating, staking, riveting, and machine screw assemblage shall be neat and thorough. The coil shall be centered properly, void of foreign objects in the air gap and shall not drag on the frame or magnet.

3.7 Recycled, recovered, or environmentally preferable materials. Recycled, recovered, or environmentally preferable materials should be used to the maximum extent possible provided that the material meets or exceeds the operational and maintenance requirements, and promotes economically advantageous life cycle costs.

4. VERIFICATION

* 4.1 Classification of inspections. The inspection requirements specified herein are classified as follows:

a. First article inspection (see 4.4).

b. Conformance inspection (see 4.5).

4.2 Test equipment and inspection facilities. The supplier shall establish and maintain a calibration system in accordance with ANSI/NCSL Z540-1.

4.3 Inspection conditions. Unless otherwise specified herein, all inspections shall be performed in accordance with the test conditions specified in the "GENERAL REQUIREMENTS" of MIL-STD-202 and MIL-STD-810.

4.4 First article inspection. First article inspection shall be performed by the contractor, after award of contract and prior to production, at a location acceptable to the Government. First article inspection shall be performed on sample units which have been produced with equipment and procedures normally used in production. First article approval is valid only on the contract or purchase order under which it is granted, unless extended by the Government to other contracts or purchase orders (see 6.3).

4.4.1 Sample size. Six earphones shall be subjected to the first article inspection.

4.4.2 Inspection routine. The sample shall be subjected to the inspections specified in table II, in the order shown. All sample units shall be subjected to the inspections of group I. The sample shall then be divided equally into two groups of three units each, three shall be subject to group II and three shall be subject to group III.

4.4.3 Failures. A single failure of any test in table II shall be cause for refusal to grant first article approval.

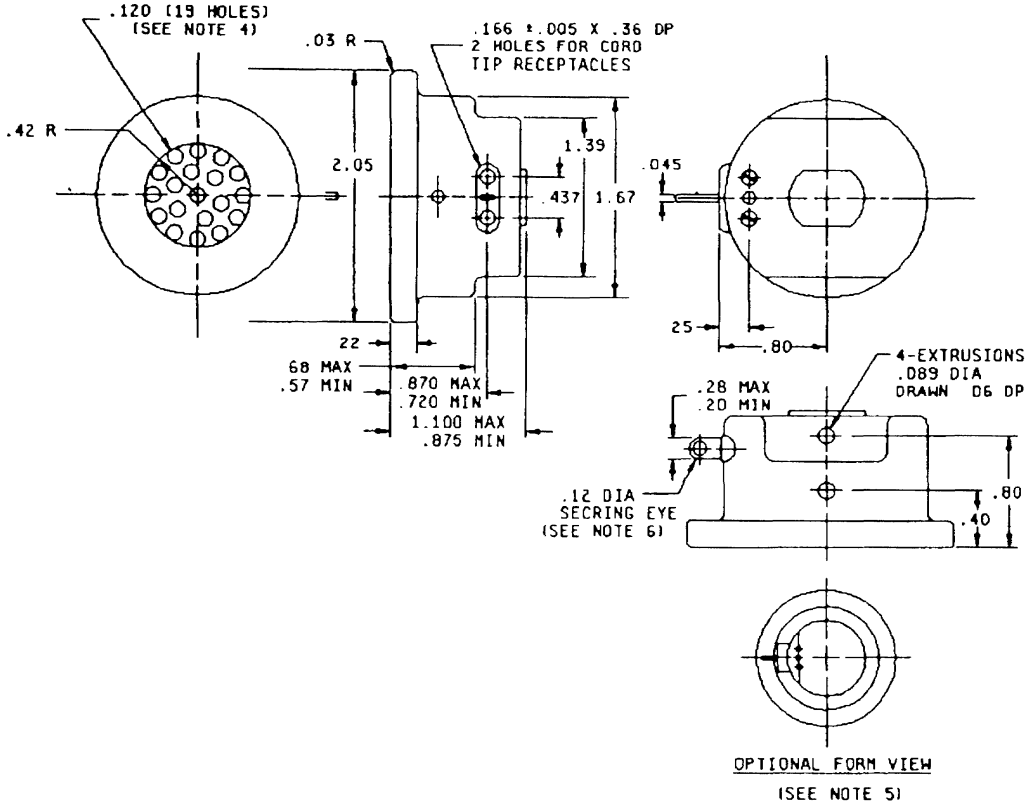

Inches	mm	Inches	mm	Inches	mm	Inches	mm
.005	0.13	.14	3.56	.40	10.16	.870	22.10
.03	0.76	.166	4.22	.42	10.67	.875	22.23
.045	1.14	.20	5.09	.437	11.10	1.100	27.94
.06	1.52	.22	5.59	.57	14.48	1.39	35.31
.086	2.18	.25	6.35	.68	17.27	1.67	42.42
.089	2.26	.28	7.11	.720	18.29	2.05	52.07
.120	3.05	.36	9.14	.80	20.32		

NOTES:

1. Dimensions are in inches.
2. Metric equivalents are given for general information only.
3. Unless otherwise specified, tolerances are ±.02 (0.51 mm) for two place decimals, ±.010 (0.25 mm) for three place decimals, and ±1/2 degree on angles.
4. Size, number and location of holes in cap to be determined by manufacturer, subject to acoustical and electrical requirements and limiting dimensions. A single comparatively large hole is not acceptable.
5. The form factor may conform to the optional view shown. However, it must conform with the above dimensions.
6. The stay cord anchor may be provided at the option of the manufacturer.

FIGURE 1. Earphone.

* TABLE II. First article inspection.

Inspection	Requirement paragraph	Test method paragraph
Group I		
Visual and mechanical examination	3.3, 3.5, and 3.6	4.6.1
Frequency response	3.4.1	4.6.2
Impedance	3.4.2	4.6.3
Harmonic distortion	3.4.3	4.6.4
Dielectric withstanding voltage	3.4.4	4.6.5
Stray magnetic field	3.4.5	4.6.6
Endurance	3.4.6	4.6.7
Acoustic quality	3.4.13	4.6.14
Group II		
Moisture resistance	3.4.7	4.6.8
Group III		
Fungus Resistant	3.2.5	4.6.15
Barometric pressure (reduced)	3.4.8	4.6.9
Thermal shock	3.4.9	4.6.10
Vibration, high frequency	3.4.10	4.6.11
Shock	3.4.11	4.6.12
Salt spray (corrosion)	3.4.12	4.6.13

4.5 Conformance inspection.

4.5.1 Inspection of product for delivery. Inspection of product for delivery shall consist of group A and group B inspections. Except as specified in 4.5.2.1.4, delivery of products which have passed the group A and group B inspections shall not be delayed pending the results of the group C inspection.

4.5.1.1 Inspection lot. An inspection lot shall consist of all earphones of the same type produced under essentially the same conditions, and offered for inspection at one time.

4.5.1.2 Group A inspection. Group A inspection shall consist of the examinations and tests specified in table III, in the order shown.

4.5.1.2.1 Sampling plan. A sample of parts shall be randomly selected in accordance with table IV. If one or more defects are found, the lot shall be rescreened and defects removed. After screening and removal of defects, a new sample of parts shall be randomly selected in accordance with table IV. If one or more defects are found in this second sample, the lot shall be rejected and shall not be supplied to the specification.

TABLE III. Group A Inspection.

Inspection	Requirement paragraph	Test method paragraph
Visual and mechanical examination	3.3, 3.5, and 3.6	4.6.1
Frequency response	3.4.1	4.6.2
Impedance	3.4.2	4.6.3
Harmonic distortion	3.4.3	4.6.4
Acoustic quality 1/	3.4.13	4.6.14

1/ This test is to be performed on a 100 percent basis.

TABLE IV. Group A, zero defect sampling plan.

Lot size	Sampling size 1/
2 to 8	100 percent
9 to 150	13
151 to 280	20
281 to 500	29
501 to 1,200	34
1,201 to 3,200	42
3,201 to 10,000	50
10,001 to 35,000	60

1/ If lot size is smaller than sample size, test all of the units.

4.5.1.3 Group B inspection. Group B inspection shall consist of the examinations and tests specified in table V in the order shown, and shall be made on sample units which have been subjected to and have passed the group A inspection.

4.5.1.3.1 Sampling plan. A sample of parts shall be randomly selected in accordance with table VI. If one or more defects are found, the lot shall be rescreened and defects removed. After screening and removal of defects, a new sample of parts shall be randomly selected in accordance with table VI. If one or more defects are found in this second sample, the lot shall be rejected and shall not be supplied to the specification.

TABLE V. Group B inspection.

Inspection	Requirement paragraph	Test method paragraph
Dielectric withstanding voltage	3.4.4	4.6.5
Stray magnetic field	3.4.5	4.6.6

TABLE VI. Group B, zero defect sampling plan.

Lot size	Sample size
2 to 50	5 1/
51 to 90	7
91 to 150	11
151 to 280	13
281 to 500	16
501 to 1,200	19
1,201 to 3,200	23
3,201 to 10,000	29
10,001 to 35,000	35

1/ If lot size is smaller than sample size, test all of the units.

4.5.1.3.2 Disposition of sample units. Sample units which have passed all the group B inspection may be delivered on the contract or purchase order, if the lot is accepted and the sample units are still within specified electrical tolerances.

4.5.2 Periodic inspection. Periodic inspection shall consist of group C inspection.

4.5.2.1 Group C inspection. Group C inspection shall consist of the examinations and tests specified in table VII, in the order shown. Group C inspection shall be made on sample units selected from inspection lots which have passed the group A and group B inspections.

4.5.2.1.1 Sampling plan. Four sample units shall be selected from each two-months production, or each 1,000 units (whichever occurs first), after date of notification of first article.

TABLE VII. Group C inspection.

Inspection	Requirement paragraph	Test method paragraph	Number of sample units to be inspected
Subgroup 1 Endurance	3.4.6	4.6.7	2
Subgroup 2 Fungus resistant Moisture resistance Visual and mechanical examination	3.2.5 3.4.7 3.3, 3.5, 3.6	4.6.15 4.6.8 4.6.1	2 for the subgroup

4.5.2.1.2 Failures. If one or more sample units fail to pass group C inspection, the sample shall be considered to have failed.

4.5.2.1.3 Disposition of sample units. Sample units which have been subjected to group C inspection shall not be delivered on the contract or purchase order.

4.5.2.1.4 Noncompliance. If a sample fails to pass group C inspection, the supplier shall take corrective action on the materials or processes, or both, as warranted, and on all units of product which can be corrected and which were manufactured under essentially the same conditions, with essentially the same materials, processes, etc., and which are considered subject to the same failure. Acceptance of the product shall be discontinued until corrective action, acceptable to the Government, has been taken. After the corrective action has been taken, group C inspection shall be repeated on additional sample units (all inspection, or the inspection which the original sample failed, at the option of the Government). Group A and group B inspections may be reinstituted; however, final acceptance shall be withheld until the group C
reinspection has shown that the corrective action was successful. In the event of failure after reinspection, information concerning the failure and corrective action taken shall be furnished to the cognizant inspection activity.

4.6 Methods of examination and test.

4.6.1 Visual and mechanical examination. Earphones shall be examined to verify that the design, physical dimensions, weight, marking, and workmanship are in accordance with the applicable requirement (see 3.3, 3.5 and 3.6).

4.6.2 Frequency response (see 3.4.1). The earphone shall be mounted as shown in the test circuit (see figure 2). Adjust the output from the audio oscillator to 1.1 volts ring at 1,000 Hz as measured by

the vacuum tube voltmeter (VTVM No. 1). For first article inspection, the frequency response shall be measured and recorded in accordance with 4.6.2.1. For conformance inspection the frequency response shall be measured and recorded in accordance with 4.6.2.1 or 4.6.2.2, at the option of the supplier.

4.6.2.1 Automatic recorder. The acoustic output shall be recorded on a direct writing strip graph using an automatic plotter or curve tracer with a minimum writing speed of 10 inches per second and a maximum chart speed of 30 inches per minute. The output shall be recorded in the dB value above 0.0002 dyne per square centimeter. The writing speed and chart speed shall be noted.

4.6.2.2 Point to point. Measure the acoustic output from the calibrated microphone and preamplifier unit as indicated by the reading of VTVM No. 2 (see figure 2), and convert this reading to the equivalent dB value above 0.0002 dyne per square centimeter, using the most recent available calibration curve for the test microphone. Measure and record the dB increments of 100 Hz from 100 Hz to 1,000 Hz and at increments of 250 Hz from 1,000 Hz to 8,000 Hz. The graph shall show the dB values on the ordinate scale, reading from 80 dB to 140 dB above 0.0002 dyne per square centimeter, and the Hz value on the abscissa scale, reading from 100 Hz to 10,000 Hz inclusive.

4.6.3 Impedance (see 3.4.2). Impedance measurements shall be made at 1,000 Hz with the earphone mounted on the coupler as shown on figure 2. The 1,000 Hz voltage applied across the terminals of the earphone element during impedance measurements shall be between 0.9 and 1.3 volts rms. The impedance shall be measured by measuring the voltage across and the current through the earphone.

4.6.3.1 Voltage method. At the option of the manufacturer, the impedance may be calculated by using a voltmeter. Using a circuit similar to that shown on figure 2, measure the voltage across the 300 ohm resistor and across the earphone under test. The earphone impedance (z) is equal to

$$300X\left(\frac{V_B}{V_a - V_b}\right)$$

4.6.4 Harmonic distortion (see 3.4.3). The earphone shall be tested while connected to the test circuit and mounted on the coupler as shown on figure 2. Distortion shall be measured at 200 Hz and at frequencies between 400 Hz and 7,000 Hz, as are required to determine at what frequencies (in this range) maximum distortion exists.

4.6.4.1 Distortion analyzer. The total harmonic distortion shall be determined by a distortion analyzer, having the following minimum requirements:

a. Frequency range: Fundamental frequency from 20 Hz to 20,000 Hz.

b. Frequency calibration: ±2 percent from 20 Hz to 20,000 Hz.

c. Harmonic measurement: ±3 percent of full scale value for distortion levels as low as 0.5 percent.

4.6.5 Dielectric withstanding voltage (see 3.4.4). The earphone shall be tested in accordance with method 301 of MIL-STD-202. The following details shall apply:

a. Test voltage: 500 volts.

b. Nature of potential: 60 Hz.

c. Points of application: Earphone - between one of the terminals and the clamping ring, the metallic case, or other metallic surface which is not covered by a nonconducting coating. Simultaneously, the coil shall be excited with 9.5 volts rms at 200 Hz.

* 4.6.6 Stray magnetic field (see 3.4.5). Stray magnetic field measurements shall be made in a shielded room or in an area free from appreciable magnetic disturbances. The earphone shall be rotated on its axis at various points of an 8 inch radius sphere surrounding a A-A-52024, Type II, Compass, or equal.

4.6.7 Endurance (see 3.4.6). Audio power of 300 milliwatts ring at 1,000 Hz shall be applied continuously to each earphone under test for 8 hours. During the last hour of test, the earphones shall be checked for audible rattles or other signs of failure. At the end of the 8 hours, the frequency response shall be measured as specified in 4.6.2.

4.6.8 Moisture resistance (see 3.4.7). The earphone shall be tested in accordance with method 106 of MIL-STD-202. The following details and exceptions shall apply:

a. Initial measurements: Not applicable.

b. Mounting: Any convenient mounting with the front face of the earphone exposed and parallel with the vertical plane.

c. Loading voltage: Not applicable.

d. Final measurements: At the completion of the tenth cycle and following a 24-hour period at 25°C ±5°C and 50 percent ±5 percent relative humidity, the earphone element shall be tested for frequency response, harmonic distortion, and dielectric withstanding voltage in accordance with
4.6.2, 4.6.4, and 4.6.5, respectively and examined for loose or deformed parts and other damage.

4.6.9 Barometric pressure (reduced) (see 3.4.8). Earphones shall be tested in accordance with method 105 of MIL-STD-202. The following details shall apply:

a. Method of mounting: Not applicable.

b. Test condition letter: B.

c. Tests during subjection to reduced pressure: None required.

d. Tests after subjection to reduced pressure: Frequency response in accordance with 4.6.2.

e. Exposure time prior to measurements: 10 minutes.

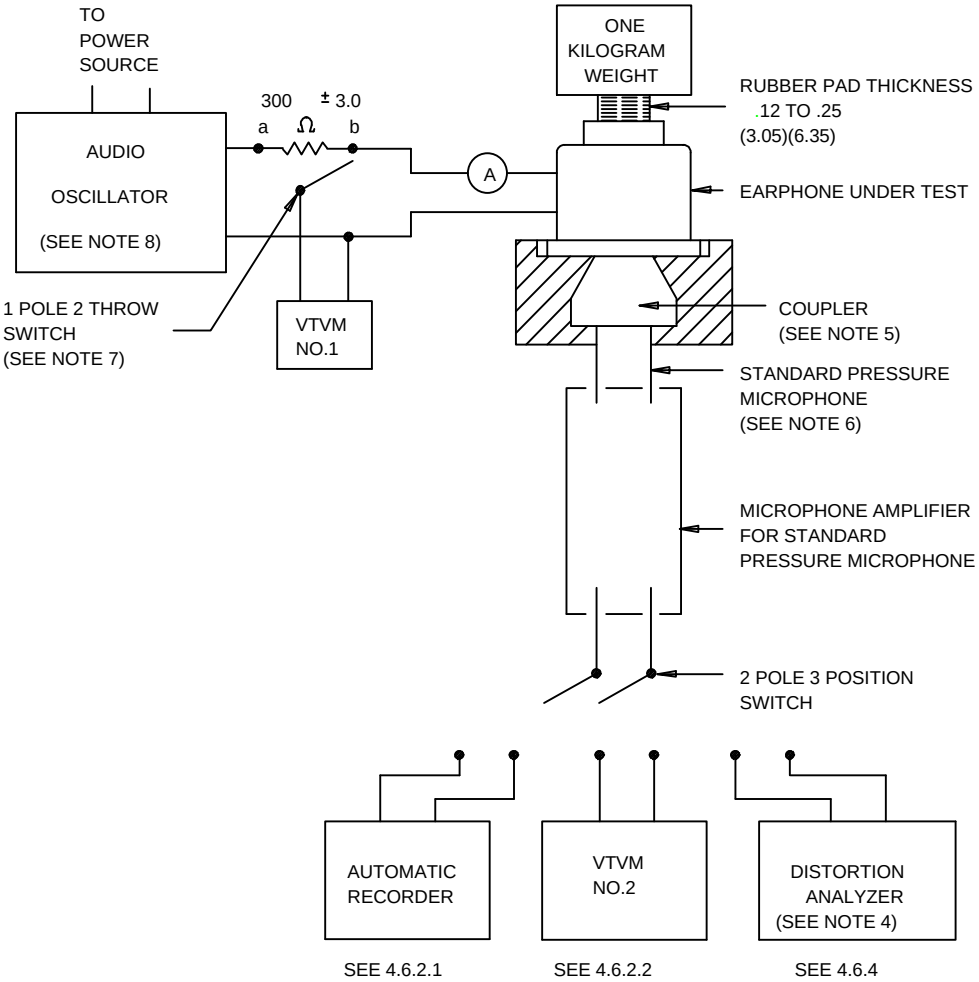

NOTES:

1. Dimensions are in inches.
2. Metric equivalents are given for general information only.
3. Metric equivalents are in parentheses.
4. See 4.6.4.1 for type and requirement for distortion analyzer.
5. Coupler in accordance with ANSI S3.7-1995, type I.
6. Standard pressure microphone, in accordance with ANSI S1. 12-1967.
7. Use switch position “b” for paragraph 4.6.3 and switch position “a” for all other paragraphs requiring electrical tests.
8. Audio oscillator output shall have characteristic output impedance of 600 ohms.
9. “OFF” position on switches is optional.
10. Either voltmeter method or voltmeter-ammeter method is acceptable.

FIGURE 2. Typical test circuit.

4.6.10 Thermal shock (see 3.4.9). Earphones shall be tested in accordance with method 107 of MIL-STD-202. The following details shall apply:

a. Test condition letter: A.

b. Measurement after cycling: Frequency response in accordance with 4.6.2.

4.6.11 Vibration, high frequency (see 3.4.10). Earphones shall be tested in accordance with method 204 of MIL-STD-202. The following details shall apply:

a. Mounting specimens: Diaphragm of the earphone shall be in a vertical plane on the vibrating machine.

b. Electrical load conditions: 60 milliwatts ring at 1,000 Hz applied to the earphones.

c. Test condition letter: A.

d. Measurement after vibration: Frequency response in accordance with 4.6.2.

4.6.12 Shock (specified pulse) (see 3.4.11). Earphones shall be tested in accordance with method 213 of MIL-STD-202. The following details shall apply:

a. Mounting method: The earphone shall be rigidly attached to an auxiliary mounting plate. The auxiliary mounting plate shall then be rigidly attached to the anvil plate of the shock machine.

b. Test condition letter: G.

c. Measurement after shock: Frequency response in accordance with 4.6.2.

4.6.13 Salt spray (corrosion) (see 3.4.12). Earphones shall be tested in accordance with method 101 of MIL-STD-202. The following details and exceptions shall apply:

a. Applicable salt solution: 5 percent.

b. Test condition letter: A.

c. Measurement after exposure: Acoustic quality, in accordance with 4.6.14.

d. Additional conditioning: Earphones shall be cleaned as prescribed, and dried for 48 hours in a chamber having an ambient temperature of 16°C to 32°C and a maximum relative humidity of 30 percent.

e. Additional measurement: Within 3 hours after the drying period, the earphones shall be tested in accordance with 4.6.2.

4.6.14 Acoustic quality (see 3.4.13). The 1.1 volt ±0.1 volt ring shall be applied continuously to the terminals of the earphone. The frequency shall be varied continuously from 100 Hz to 7,000 Hz and back to 100 Hz. The acoustic output shall be checked for buzzing, rattling, and other spurious sounds.

- 4.6.15 Fungus resistant (see 3.2.5). Prior to fabrication, earphone materials shall be tested an accordance with method 508 of MIL-STD-810. The external surfaces shall be inspected for evidence of fungus.

5. PACKAGING

5.1 Packaging. For acquisition purposes, the packaging requirements shall be as specified in the contract or order (see 6.2). When actual packaging of materiel is to be performed by DoD personnel, these personnel need to contact the responsible packaging activity to ascertain requisite packaging requirements. Packaging requirements are maintained by the Inventory Control Point's packaging activity within the Military Department or Defense Agency, or within the Military Department's System Command. Packaging data retrieval is available from the managing Military Department's or Defense Agency's automated packaging files, CD-ROM products, or by contacting the responsible packaging activity.

6. NOTES

(This section contains information of a general or explanatory nature that may be helpful, but is not mandatory.)

* 6.1 Intended use. Earphones covered by this specification are used in military unique communication equipment applications requiring proper performance under extreme operating conditions in extended frequency range headsets, including the H-216A/U.

6.2 Acquisition requirements. Acquisition documents must specify the following:

a. Title, number, and date of the specification.

b. Issue of DoDISS to be cited in the solicitation, and if required, the specific issue of individual documents referenced (see 2.1).

c. Packaging requirements (see 5.1).

6.3 First article. When first article inspection is required, the contracting officer should provide specific guidance to offerors whether the item should be a preproduction sample, a first article sample, a first production item, a standard production item from the contractor's current inventory (see 3.1) and the number of items to be tested as specified in 4.4. The contracting officer should also include specific instructions in acquisition documents regarding arrangements for examinations, approval of first article test results, and disposition of first articles. Invitations for bids should provide that the Government reserves the right to waive the requirement for samples for first article inspection to those bidders offering such products, who wish to rely on such production or test, must furnish evidence with the bid that prior Government approval is presently appropriate for the pending contract. Bidders should not submit alternate bids unless specifically requested to do so in the solicitation.

6.4 Subject term (key word) listing.

Frequency response
Harmonic distortion
Impedance

6.5 Changes from previous issue. The margins of this specification are marked with asterisks to indicate where changes from the previous issue were made. This was done as a convenience only and the Government assumes no liability whatsoever for any inaccuracies in these notations. Bidders and contractors are cautioned to evaluate the requirements of this document based on the entire content irrespective of the marginal notations and relationship to the last previous issue.

Custodians:
Army - CR
Navy - EC
Air Force – 85

Reviewers:
Air Force - 99
Army - MI

Preparing activity:
DLA - CC

(Project 5965-0268)