FED SUP CLASS
5930

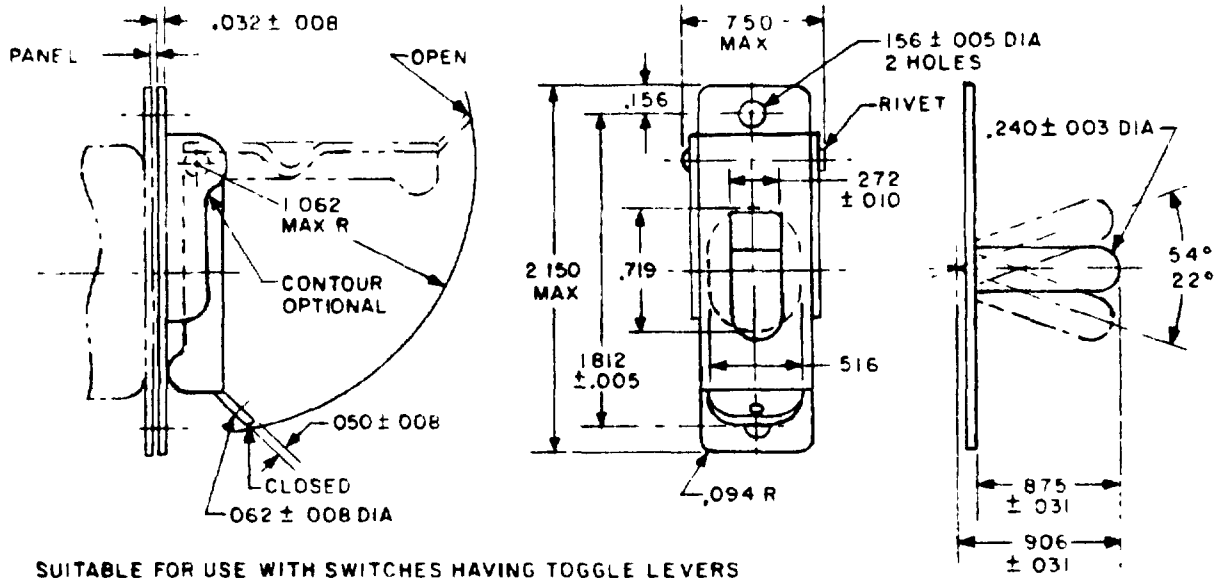

SUITABLE FOR USE WITH SWITCHES HAVING TOGGLE LEVERS IN ACCORDANCE WITH DETAIL A (3 HOLE MOUNTING)

DETAIL A

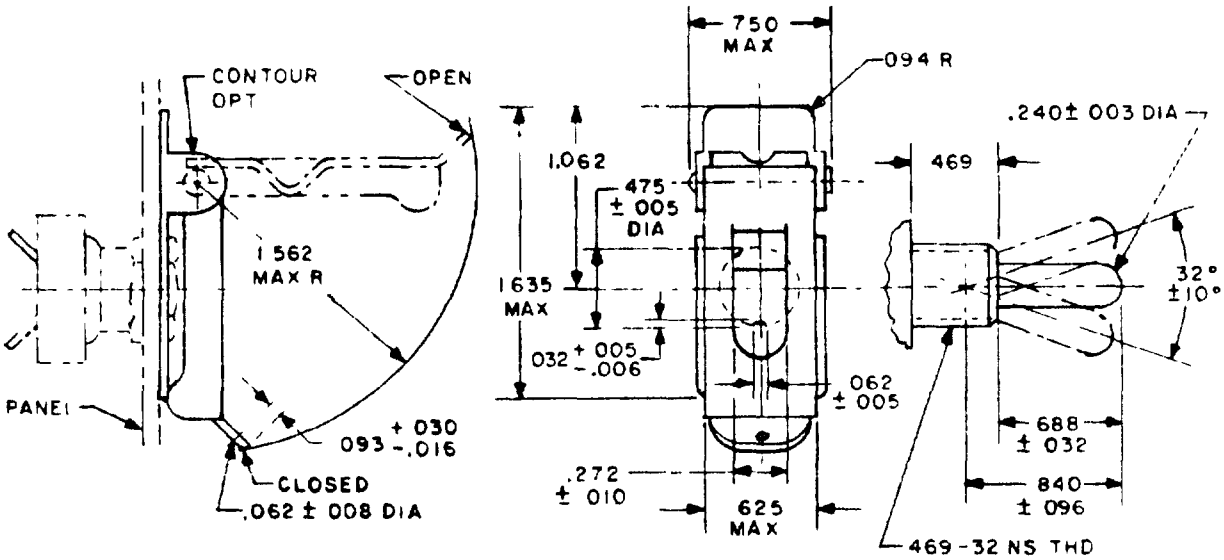

SUITABLE FOR USE WITH SWITCHES HAVING TOGGLE LEVERS IN ACCORDANCE WITH DETAIL B (1 HOLE MOUNTING)

DETAIL B

DASH NO	TYPE	PANEL THICKNESS (REF)	OPERATING FORCE
-1 1/	3-HOLE MOUNTING	050 TO 081	2 TO 1 5 LB
-2	1-HOLE MOUNTING	050 TO .248	

1/ INACTIVE FOR NEW DESIGN - USE FOR REPLACEMENT ONLY

(J) denotes changes

REVISED (G) 30 SEP 81 (H) 25 MAY 82 (J) 20 DEC 82

APPROVED 9 MAR 53

P. AF-85 Other Cust ARMY-ER NAVY-AS	International interest	TITLE GUARD, SWITCH, 3 POSITION	MILITARY STANDARD MS25034
Preparing Specification MIL-G-7703		SUPERSEDES BuAer 50A1A3 & 51A1A27	PAGE 1 OF 2

DD FORM MAY 672 (Unordinated) OBSOLETE EDITIONS OF THIS FORM ARE OBSOLETE

5930-1226-2

This military standard is approved for use by all Departments and Agencies of the Department of Defense. Selection for all new engineering and design applications and for repetitive use shall be made from this document when applicable.

Review activities: Army - Navy - Air Force - 99

User activities: Army - Navy - Air Force -

FED SUP CLASS
5930

INCHES	MM	INCHES	MM	INCHES	MM
.003	.08	.081	2.06	.625	15.88
.005	.13	.093	2.36	.688	17.47
.006	.15	.094	2.39	.719	18.26
.008	.20	.096	2.44	.750	19.05
.010	.25	.156	3.96	.840	21.34
.016	.41	.240	6.10	.875	22.22
.030	.76	.248	6.30	.906	23.01
.031	.79	.272	6.91	1.062	26.97
.032	.81	.469	11.91	1.562	39.67
.050	1.27	.475	12.06	1.635	41.53
.062	1.57	.516	13.11	1.812	46.02
				2.150	54.61

NOTES

1. Dimensions are in inches.
2. Unless otherwise specified, tolerances are ±.016 on decimals.
3. Material Steel, commercial, shall be smooth and free from burrs.
4. Finish Zinc plate, QQ-Z-325, type III, or cadmium plate, QQ-P-416, type III, with optional supplementary treatment per MIL-C-8514 or DOD-P-15328, black enamel, lusterless, color number 37038 or semigloss, color number 27038, Federal Standard 595 or equivalent.
5. Guard shall remain in either the open or closed position.
6. Opening the guard shall not change position of switch contacts.
7. When lever is in upward position, closing guard shall throw lever to the center position.
8. Normal operation of the toggle between the center and down positions shall be possible without having to lift the guard.
9. This standard takes precedence over documents referenced herein.
10. Referenced documents shall be of the issue in effect on date of invitations for bid.

REVISED (J) FOR CHGS SEE PG 2

APPROVED

AF-85 Other Cust ARMY-ER NAVY-AS	International interest	TITLE GUARD, SWITCH, 3 POSITION	MILITARY STANDARD MS25034
MIL-G-7703		SUPERSEDES BuAer 50A1A3 & 51A1A27	PAGE 2 OF 2

DD FORM 672 (Coordinates Previous Editions of this Form are Obsolete)