FED SUP CLASS
5930

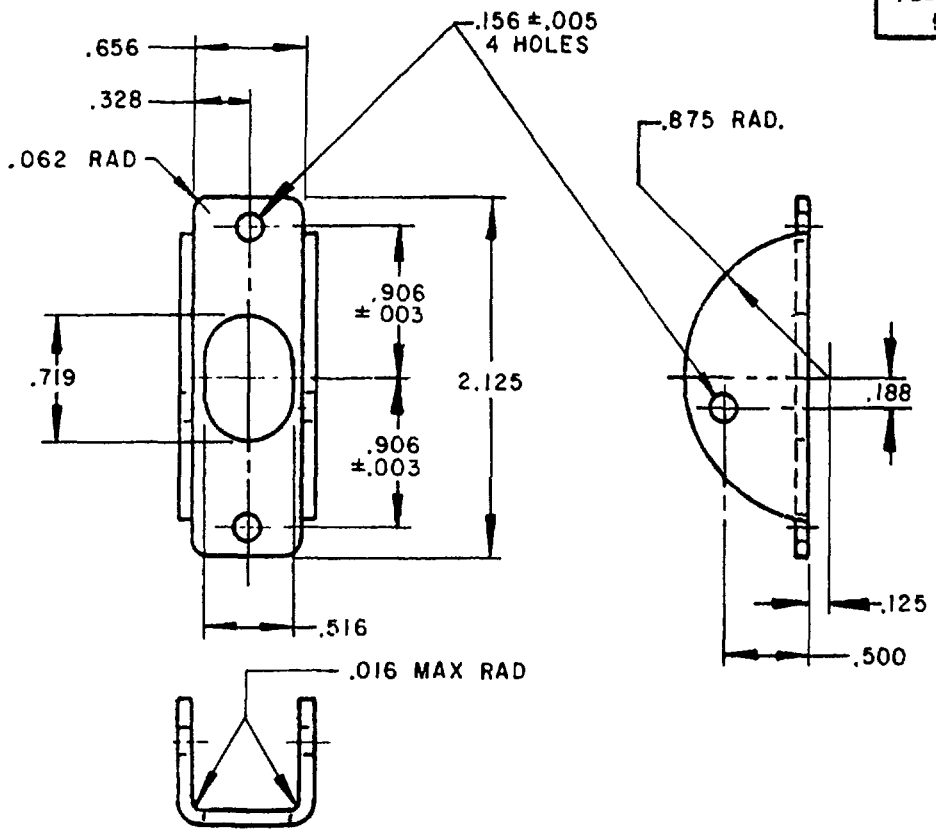

DASH NO.
-1

(F)

INCHES	MM	INCHES	MM
.003	.08	.328	8.33
.005	.13	.500	12.70
.008	.20	.516	13.11
.016	.41	.656	16.66
.062	1.57	.719	18.29
.125	3.18	.875	22.22
.156	3.96	.906	23.01
.188	4.77	2.125	53.98

NOTES:
1. Dimensions are in inches.
2. Unless otherwise specified, tolerances are ±.016 on decimals.
3. Material: Steel, commercial, .032 ±.008, shall be smooth and free from burrs.
4. (F) Finish: Zinc plate, QQ-Z-325, type III, or cadmium plate, QQ-P-416, type III, with optional supplementary treatment per MIL-C-8514 or DOD-P-15328, black enamel, lusterless, color number 37038 or semigloss, color number 27038, Federal Standard 595 or equivalent.
5. This standard takes precedence over documents referenced herein.
6. Referenced documents shall be of the issue in effect on date of invitations for bid.

INACTIVE FOR NEW DESIGN USE FOR REPLACEMENT ONLY.

(F) denotes changes

P A AF - 85 Other Cust ARMY - ER NAVY - AS	International Interest	TITLE GUARD, SWITCH, 2 OR 3 POSITION	MILITARY STANDARD MS 25221
Procurement Specification MIL-G-7703		SUPERSEDES: AN3225	PAGE 1 OF 1

DD FORM 1 MAY 73 672 (Coordinated) PREVIOUS EDITIONS OF THIS FORM ARE OBSOLETE

5930-1226-4

User activities: Army - Navy - Air Force -
Review activities: Army - Navy - Air Force - 99

This military standard is approved for use by all Departments and Agencies of the Department of Defense. Selection for all new engineering and design applications and for repetitive use shall be made from this document when applicable

APPROVED 25 Feb 57 REVISED (A) 7 May 59 (B) 15 Dec 61 (C) 5 Aug 71 (D) 5 Jul 79 (E) 30 Sep 81 (F) 20 DEC 82