PROJECT NO. 5985-0839

FED. SUP CLASS
5985

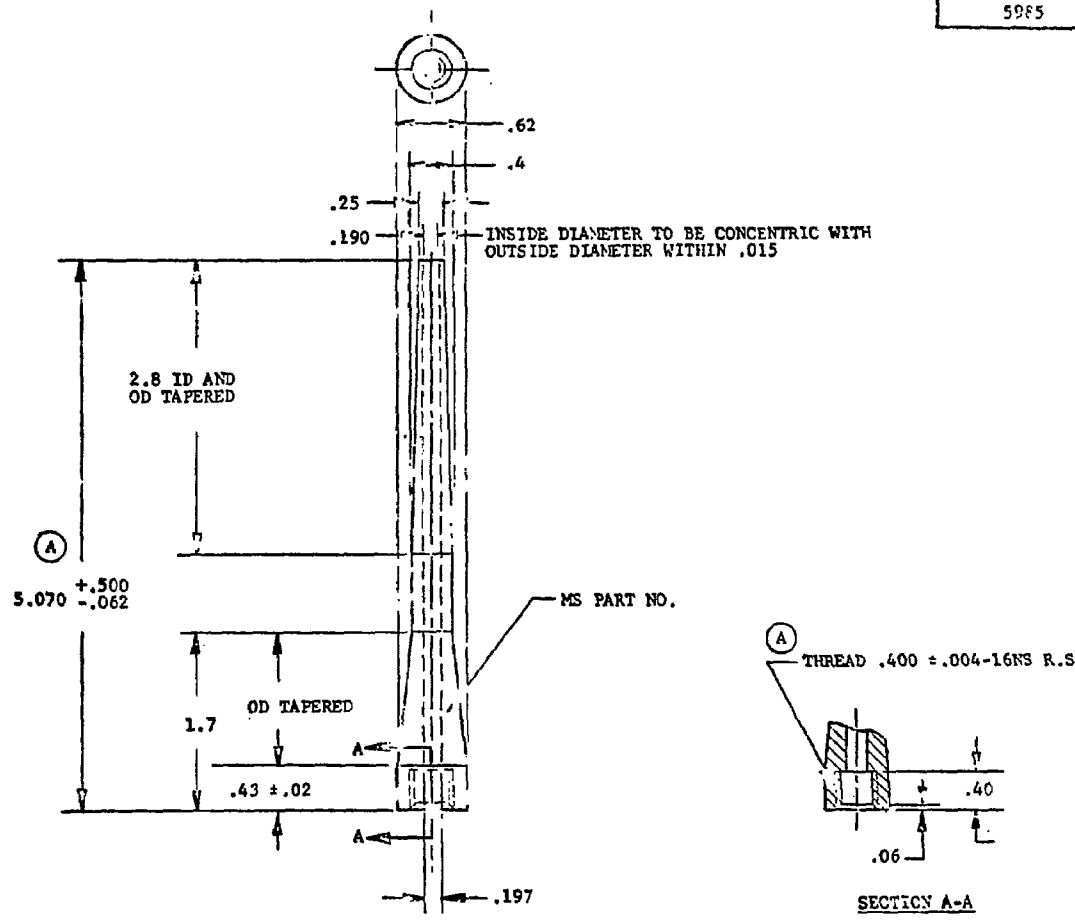

MS PART NO.
MS25061-1

NOTES:

1. MATERIAL: DIELECTRIC, SUITABLE FOR THE PURPOSE.
2. DIMENSIONS IN INCHES. UNLESS OTHERWISE SPECIFIED, TOLERANCES: ONE PLACE DECIMALS ±.1, TWO PLACE DECIMALS ±.02, THREE PLACE DECIMALS ±.005.
3. THREADS SHALL CONFORM TO MIL-S-7742.
4. MAXIMUM WEIGHT .03 POUNDS.

FOR DESIGN FEATURE PURPOSES, THIS STANDARD TAKES PRECEDENCE OVER PROCUREMENT DOCUMENTS REFERENCED HEREIN. REFERENCED DOCUMENTS SHALL BE OF THE ISSUE IN EFFECT OR DATE OF INVITATIONS FOR BID.

(A) REVISED

APPROVED 18 AUG 55 REVISED (A) 18 JUNE 76

P.A. NAVY-AS. Other Cust USAF - 85	TITLE SLEEVE, SUPPORT, ANTENNA, INTERNAL THREAD	MILITARY STANDARD MS25061
PROCUREMENT SPECIFICATION MIL-A-7965	SUPERSEDES: MS25061(ASG)	SHEET 1 OF 1

DD FORM 1 MAR 72 672-1 (Coordinated)

PREVIOUS EDITIONS OF THIS FORM ARE OBSOLETE

USER SYL

REVIEWER SYMBOLS:

"Review/user information: As of the date of this document. For future coordination of changes to this document, draft circulation should be based on the information in the current DODISS."

Any standard is approved for use by all Departments & Agencies of the Department of Defense. Selection for all new engineering and design applications and for repetitive use shall be made from this document.