MILITARY SPECIFICATION SHEET

MAINTENANCE KITS, ELECTRICAL CONNECTORS, CONTACTS, AND CONNECTOR AND CABLE ACCESSORIES: MAINTENANCE KIT FOR F-15 AIRCRAFT CONNECTOR SYSTEMS

This specification is approved for use by all Departments and Agencies of the Department of Defense.

The requirements for acquiring the product described herein shall consist of this specification and the issue of the following specification listed in that issue of the Department of Defense Index of Specifications and Standards (DODISS) specified in the solicitation: MIL-M-83521

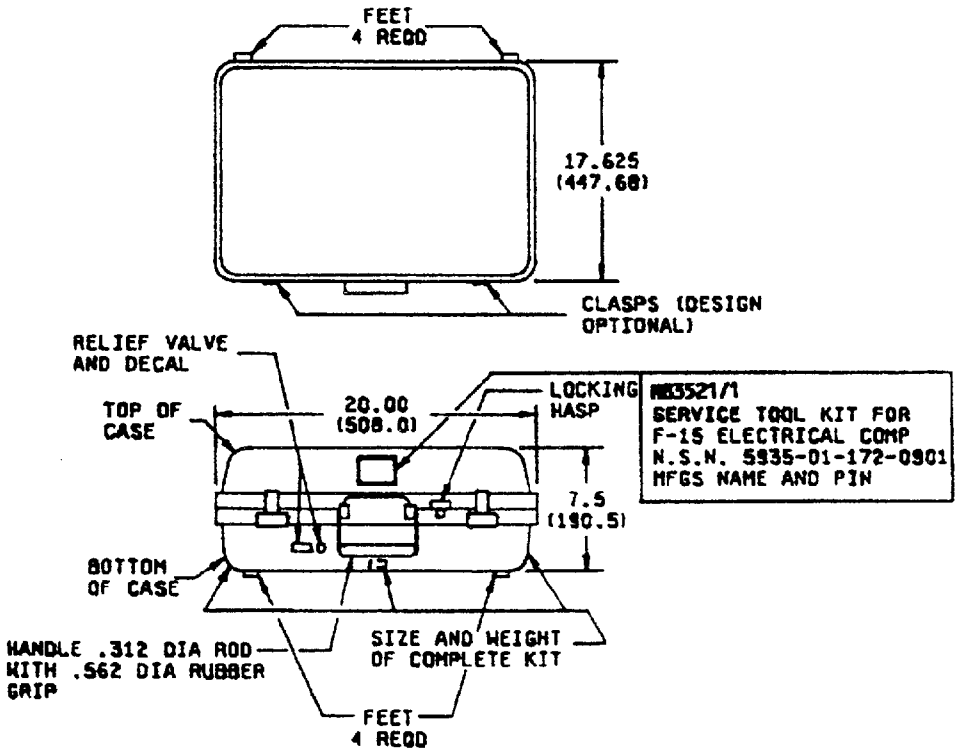

NOTES:
1. Dimensions are in inches.
2. Metric equivalents are given for information only.
3. Metric equivalents are in parentheses.
4. Part or Identifying number (PIN) M83521/1-01 includes case and tools.

FIGURE 1. Maintenance kit for F-15 aircraft connectors.

DISTRIBUTION STATEMENT A. Approved for public release; distribution is unlimited.

TABLE I. Parts list.

Quantity	Part or Identifying Number (PIN) 1/ 2/	Description
2	M83521/1-02	Tool case assembly
2	M22520/1-01	Crimp tool frame
1	M22520/1-02	Turret head
1	M22520/1-04	Turret head
1	M22520/1-12	Turret head
1	M22520/1-13	Turret head
1	M22520/1-14	Turret head
1	M22520/1-15	Single position head
1	Daniels TH18	Turret head (CAGE 11851)
1	Daniels TH317	Turret head
1	Daniels TP120	Single position head (CAGE 11851)
1	Daniels TP545	Single position head (CAGE 11851)
2	M22520/2-01	Crimp tool frame
1	M22520/2-02	Positioner
1	M22520/2-03	Positioner
1	M22520/2-06	Positioner
1	M22520/2-07	Positioner
1	M22520/2-08	Positioner
1	M22520/2-09	Positioner
1	M22520/2-10	Positioner
1	M22520/2-24	Positioner
1	M22520/2-31	Positioner
1	M22520/2-33	Positioner
1	M22520/2-34	Positioner
1	Daniels K300	Positioner (CAGE 11851)
1	Daniels K127	Positioner (CAGE 11851)
1	Daniels K160	Positioner (CAGE 11851)
1	Daniels K413	Positioner (CAGE 11851)

See footnotes at end of table.

TABLE I. Parts list - Continued.

Quantity	Part or Identifying Number (PIN) 1/ 2/	Description
1	M22520/3-01	Gauge
2	M22520/5-01	Crimp tool frame
1	M22520/5-03	Die set
1	M22520/5-05	Die set
1	M22520/5-09	Die set
1	M22520/5-10	Die set
1	M22520/5-11	Die set
1	M22520/5-19	Die set
1	M22520/5-25	Die set
1	M22520/5-35	Die set
1	M22520/5-37	Die set
1	M22520/5-41	Die set
1	M22520/5-43	Die set
1	M22520/5-45	Die set
1	M22520/5-61	Die set
2	M22520/5-100	Die set
1	M22520/5-101	Die set
1	Daniels Y248	Die set (CAGE 11851)
1	Daniels Y308S	Die set (CAGE 11851)
1	Daniels Y516	Die set (CAGE 11851 - Raychem equivalent)
1	Daniels Y622	Die set (CAGE 11851)
1	AMP 45158-2	Die set - Equivalent to Daniels Y717 (CAGE 00779 and 11851)
1	AMP 45241-2	Die set - Equivalent to Daniels Y718 (CAGE 00779 and 11851)
1	AMP 45240-2	Die set - Equivalent to Daniels Y719 (CAGE 00779 and 11851)
1	AMP 45239-2	Die set - Equivalent to Daniels Y720 (CAGE 00779 and 11851)

See footnotes at end of table.

TABLE I. Parts list - Continued.

Quantity	Part or Identifying Number (PIN) 1/ 2/	Description
1	AMP 45238-2	Die set - Equivalent to Daniels Y721 (CAGE 00779 and 11851)
1	AMP 45066-3	Die set - Equivalent to Daniels Y722 (CAGE 00779 and 11851)
1	AMP 45065-3	Die set - Equivalent to Daniels Y723 (CAGE 00779 and 11851)
1	AMP 45064-3	Die set - Equivalent to Daniels Y724 (CAGE 00779 and 11851)
1	AMP 45063-3	Die set - Equivalent to Daniels Y725 (CAGE 00779 and 11851)
1	AMP 45062-3	Die set - Equivalent to Daniels Y726 (CAGE 00779 and 11851)
1	AMP 45061-3	Die set - Equivalent to Daniels Y727 (CAGE 00779 and 11851)
1	AMP 59500	SAHT thermashield (CAGE 00779)
2	Daniels HX3-82	Die removal tool (CAGE 11851)
1	AMP 46673	Dual action hand crimp tool (CAGE 00779)
1	AMP 46988	Dual action hand crimp tool (CAGE 00779)
1	AMP 59461	Crimp tool (CAGE 00779)
1	AMP 69324-1	Crimp tool (CAGE 00779)
1	Burndy M8ND	Crimp tool (CAGE 09922)
1	Burndy M22RVMT9	Die set (CAGE 09922)
1	M22520/31-01	Crimp tool only
1	M22520/31-02	Positioner only
1	M22520/XX-XX	Inspection gauge
1	MS90387-2	Tie wrap gun
1	Daniels MT0001	Puller EWWS RF cable (CAGE 11851)
1	Daniels MT0002	Puller RWR "TK" cable (CAGE 11851)
1	Daniels MT0003	Puller RWR "YK" cable (CAGE 11851)

See footnotes at end of table.

TABLE I. Parts list - Continued.

Quantity	Part or Identifying Number (PIN) 1/ 2/	Description
2	Ideal 45-123	Wire cutter (CAGE 30119)
1	Ideal 45-162	Coaxial cable stripper (CAGE 30119)
1	Ideal 45-163	Coaxial cable stripper (CAGE 30119)
1	Ideal 45-164	Coaxial cable stripper (CAGE 30119)
1	Ideal 45-165	Coaxial cable stripper (CAGE 30119)
1	Ideal 45-170	Wire stripper (10-14 AWA) (CAGE 30119)
1	Ideal 45-171	Wire stripper (16-25 AWA) (CAGE 30119)
1	Ideal 45-170	Wire stripper (10-14 TEFL) (CAGE 30119)
1	Ideal 45-1609	Special stripper (CAGE 30119)
1	Ideal 45-1609-1	Blade pack (CAGE 30119)
1	Ideal 45-1633	Wire stripper (CAGE 30119)
1	Ideal 45-1633-1	Blade pack (CAGE 30119)
1	Ideal 45-1654	Wire stripper (16-26 AWA) (CAGE 30119)
1	Ideal 45-1654-1	Blade pack (CAGE 30119)
1	Ideal L-5210	Blades (CAGE 30119)
1	Ideal L-5211	Blade set (CAGE 30119)
1	Ideal L-5559	Blade set (CAGE 30119)
1	Reon R-700	Twisted pair stripper (CAGE 97979)
1	Reon R-701	Replacement blade set (CAGE 97979)
1	Reon R-720(8MIL)	Wire stripper (8 mil) (CAGE 97979)
1	Reon R-720(6MIL)	Wire stripper (6 mil) (CAGE 97979)
1	Reon R-721(8MIL)	Replacement blade set (8 mil)(CAGE 97979)
1	Reon R-721(6MIL)	Replacement blade set (6 mil)(CAGE 97979)
25	M81969/14-01	Insertion/removal tool
25	M81969/14-02	Insertion/removal tool
15	M81969/14-03	Insertion/removal tool
20	M81969/14-04	Insertion/removal tool

See footnotes at end of table.

TABLE I. Parts list - Continued.

Quality	Part or Identifying Number (PIN) 1/ 2/	Description
1	M81969/19-10	Removal tool
20	M81969/39-01	Insertion/removal tool
1	M81969/17-05	Insertion tool
1	M81969/17-04	Insertion tool
1	M81969/17-03	Insertion tool
2	M81969/17-09	Insertion tool
1	M81969/17-11	Insertion tool
1	M81969/8-09	Installing tweezer
1	M81969/8-07	Installing tweezer
1	M81969/8-05	Installing tweezer
1	M81969/8-03	Installing tweezer
1	M81969/8-01	Installing tweezer
1	M81969/8-10	Removal tweezer
1	M81969/8-08	Removal tweezer
1	M81969/8-06	Removal tweezer
1	M81969/8-04	Removal tweezer
1	M81969/8-02	Removal tweezer
1	M81969/2-01	Insertion tool
1	M81969/3-05	Removal tool
1	M81969/3-01	Removal tool
2	ONO89564	Insertion tool
2	ONO89565	Removal tool
1	Daniels DAK51-8	Insertion tool (CAGE 11851)
1	Daniels DRK51-8	Removal tool (CAGE 11851)
1	Daniels DAK51-20	Insertion tool (CAGE 11851)
1	Daniels DRK51-20	Removal tool (CAGE 11851)
1	Daniels DAK83-12	Installing tweezer #12 (CAGE 11851)

See footnotes at end of table.

TABLE I. Parts list - Continued.

Quantity	Part or Identifying Number (PIN) 1/ 2/	Description
1	Daniels DRK83-12	Removal tweezer #12 (CAGE 11851)
1	Daniels DAK83-16	Installing tweezer #16 (CAGE 11851)
1	Daniels DRK83-16	Removal tweezer #16 (CAGE 11851)
1	Daniels DAK83-20	Installing tweezer #20 (CAGE 11851)
1	Daniels DRK83-20	Removal tweezer #20 (CAGE 11851)
1	Daniels DRK87-8	Removal tool #8 (CAGE 11851)
1	Daniels DRK36	Removal tool (CAGE 11851)
1	Daniels DRK51-12	Removal tool #12 (CAGE 11851)
1	Daniels DRK58-8	Removal tool - Equivalent to Burndy RX8-1 (CAGE 11851 and 09922)
1	Daniels DRK105	Removal tool (unwired contact) (CAGE 11851)
1	Daniels DRK110	Removal tool (unwired contact) (CAGE 11851)
1	Daniels DRK114-12	Removal tool #12 (CAGE 11851)
1	Daniels DRK229	Removal tweezer (CAGE 11851)
1	Daniels DAK316	Coaxial insertion tool (CAGE 11851)
1	Deutsch 114008	Removal tool (CAGE 14798)
20	Deutsch M15570-22-1	Insertion/removal tool (CAGE 14798)
2	Allen 74008	9/16 hex wrench (CAGE 74445)
1	M83521/1-XX	One set of tool selection charts, contents charts, and instruction sheets.

1/ Approved equivalent parts may be used in lieu of specified parts but must be approved in advance by 2750 LOG/ESP, Gentile AFS, OH 45444.

2/ Equivalent parts shall not be used if a military part is available.

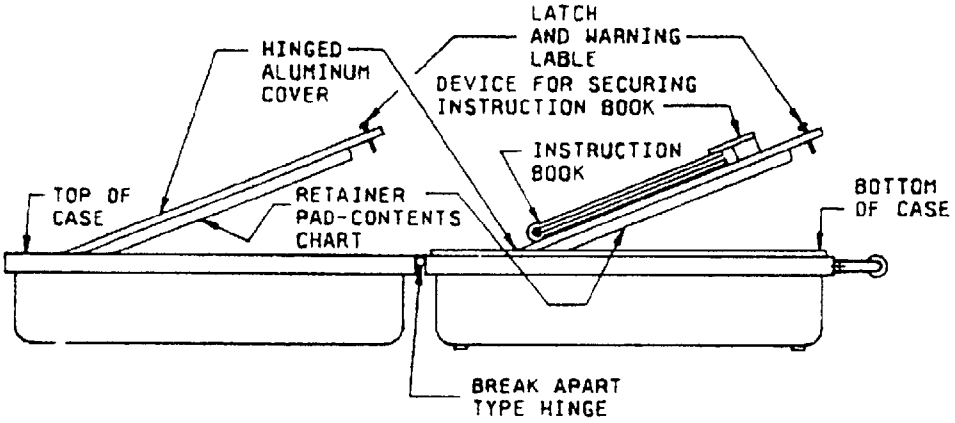

NOTES:
1. Remove all burrs; break sharp edges and corners.
2. PIN M83521/1-02 is for case only. Tools are not included.

FIGURE 2. Tool case assembly.

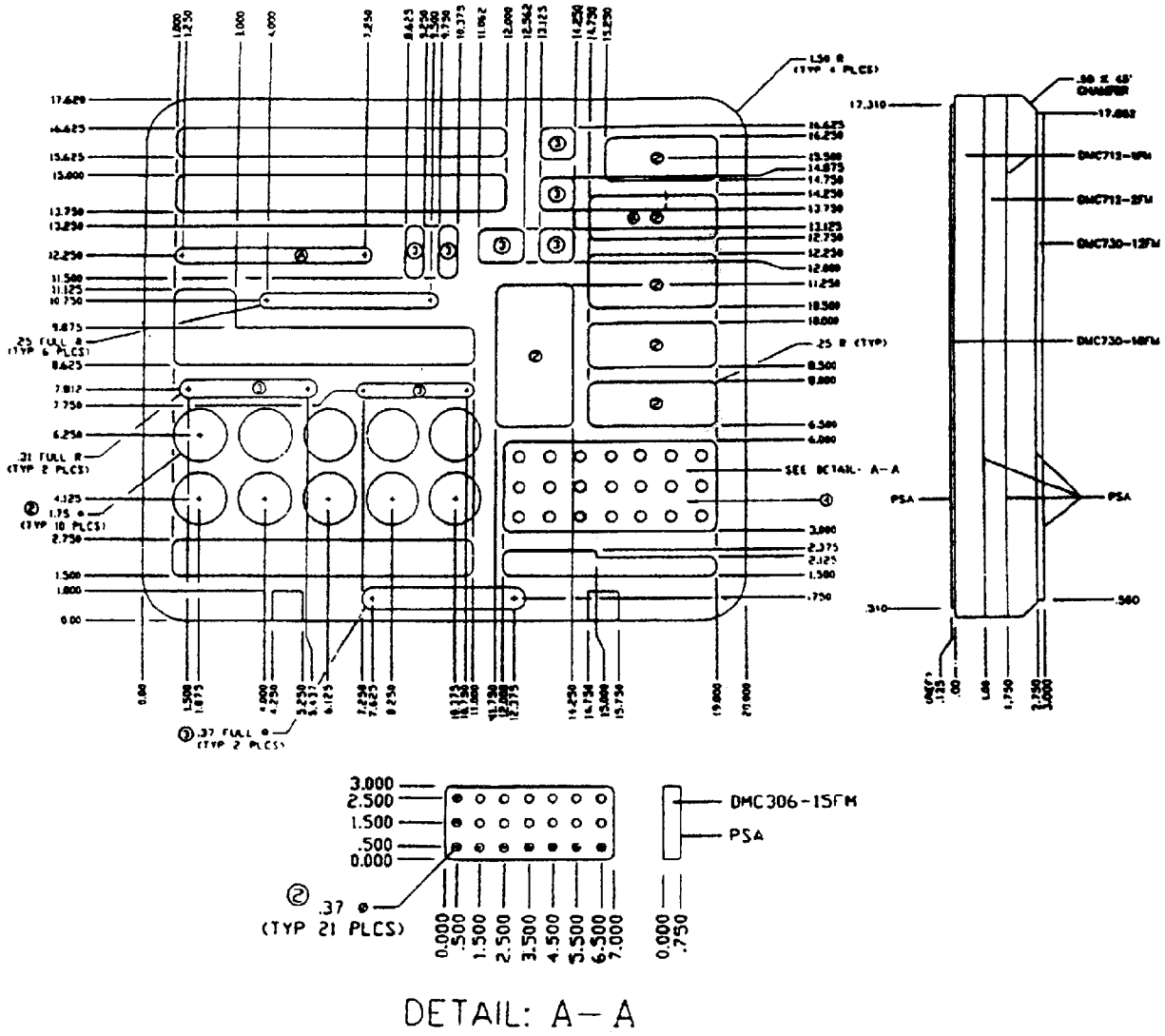

FIGURE 3. Cavity dimensions for compartment A.

Inches	mm	Inches	mm
.25	6.4	8.500	215.90
.31	7.9	8.625	219.08
.37	9.4	9.250	234.95
.50	12.7	9.500	241.30
.500	12.70	9.750	247.65
.560	14.22	9.875	250.83
.750	19.05	10.000	254.00
1.000	25.40	10.375	263.53
1.00	25.4	10.500	266.70
1.250	31.75	10.750	273.05
1.500	38.10	11.000	279.40
1.50	38.1	11.062	280.97
1.75	44.5	11.125	282.58
1.875	47.63	11.250	285.75
2.125	53.98	11.500	292.10
2.375	60.33	11.750	298.45
2.500	63.50	12.000	304.80
2.750	69.85	12.250	311.15
2.75	69.9	12.375	314.33
3.000	76.20	12.562	319.07
3.500	88.90	12.750	323.85
4.000	101.60	13.125	333.38
4.125	104.78	13.250	336.55
4.250	107.95	13.750	349.25
4.500	114.30	14.250	361.95
5.250	133.35	14.750	374.65
5.437	138.10	14.875	377.83
5.500	139.70	15.000	381.00
6.000	152.40	15.250	387.35
6.125	155.58	15.500	393.70
6.250	158.75	15.625	396.88
6.500	165.10	15.750	400.05
7.00	177.8	16.250	412.75
7.250	184.15	16.625	422.28
7.625	193.68	17.062	433.37
7.750	196.85	17.310	439.67
7.812	198.42	17.620	447.55
8.000	203.20	19.000	482.60
8.250	209.55	20.000	508.00

NOTES:
1. Dimensions are in inches.
2. Metric equivalents are given for information only.
3. All cavities are 2.75 inches deep (69.9 mm) except as noted:

(2) Cavity depth of 1.75 inches (44.5 mm).

(3) Cavity depth is 1.0 inch (25.4 mm).

(4) Cavity depth is .25 inch (6.4 mm).

FIGURE 3. Cavity dimensions for compartment A - Continued.

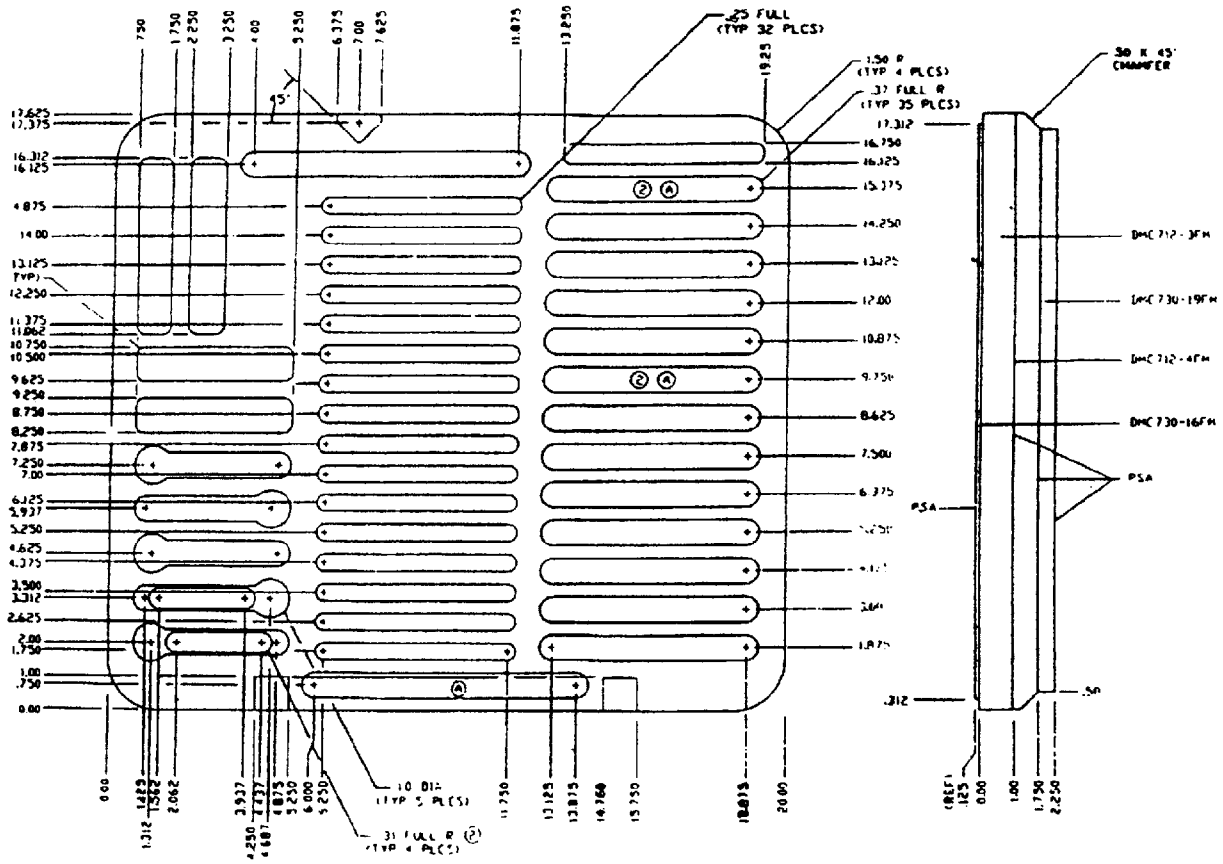

FIGURE 4. Cavity dimensions for compartment B.

Inches	mm	Inches	mm
.125	3.18	7.625	193.68
.25	6.4	7.875	200.03
.37	9.4	8.250	209.55
.50	12.7	8.625	219.08
.750	19.05	8.750	222.25
1.00	25.40	9.250	224.95
1.0	25.4	9.625	244.48
1.50	38.1	9.750	266.70
1.750	44.50	10.750	273.05
1.75	44.5	10.875	276.23
1.875	47.63	11.062	280.97
2.00	50.8	11.375	288.93
2.250	57.15	11.875	301.63
2.625	66.68	12.00	304.8
3.00	76.2	12.250	311.15
3.259	82.78	13.125	333.38
3.312	84.12	13.250	336.55
3.500	88.90	14.00	355.6
4.00	101.60	14.075	357.51
4.125	104.78	14.250	361.95
4.375	111.13	15.375	390.53
4.625	117.48	16.125	409.58
5.250	133.35	16.312	414.32
5.937	150.80	16.750	425.45
6.125	155.58	17.312	439.72
6.375	161.93	17.375	441.33
7.00	177.8	17.625	447.68
7.250	184.15	19.25	489.0
7.500	190.50		

NOTES:

1. Dimensions are in inches.
2. Metric equivalents are given for information only.
3. All cavities are 1.0 inch deep (25.4 mm) except as noted:

   (2) Cavity depth of 1.75 inches (44.5 mm).

FIGURE 4. Cavity dimensions for compartment B - Continued.

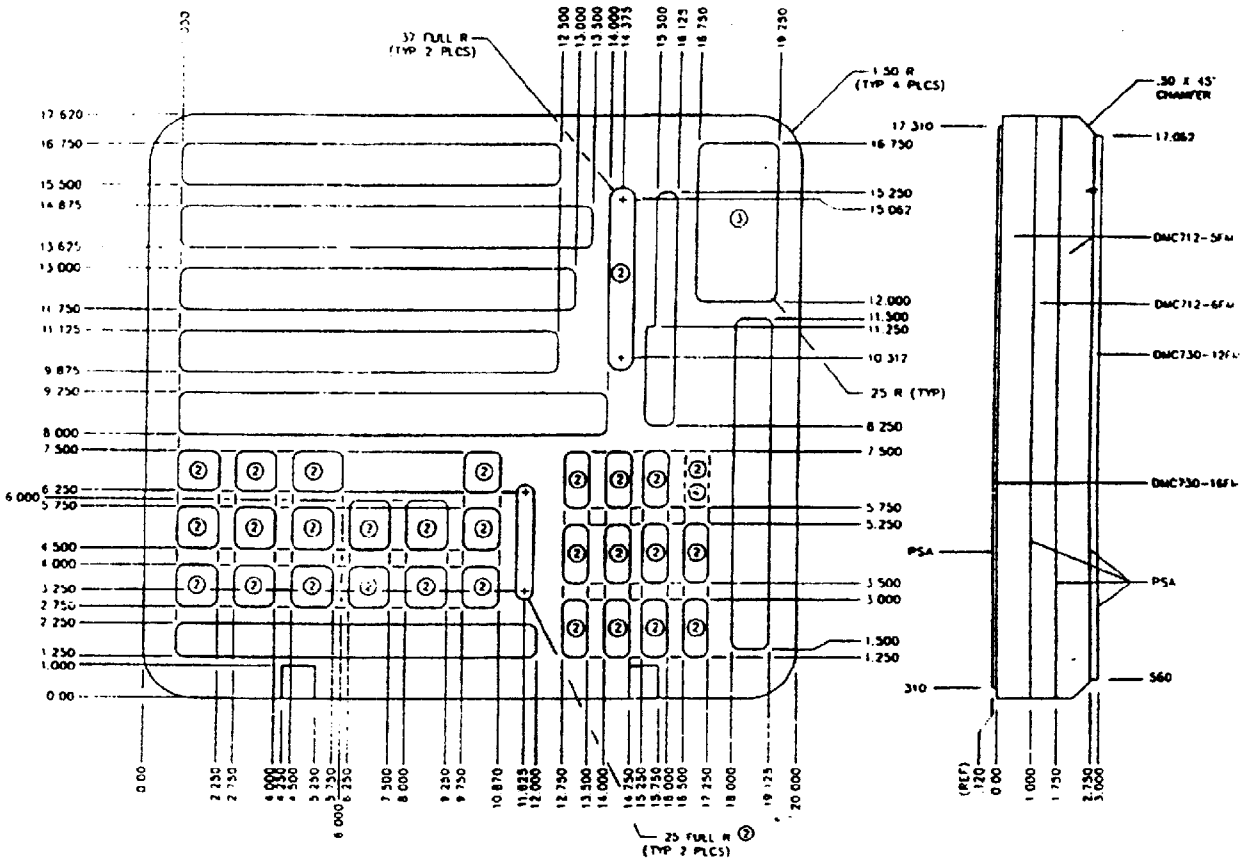

FIGURE 5. Cavity dimensions for compartment C.

Inches	mm	Inches	mm
.120	3.05	8.250	209.55
.25	6.4	9.250	234.95
.310	7.87	9.875	250.83
.37	9.4	10.312	261.92
.50	12.7	11.125	282.58
.560	14.22	11.250	285.75
1.000	25.4	11.500	292.10
1.0	25.40	11.750	298.45
1.250	31.75	12.000	304.80
1.500	38.10	12.500	317.50
1.50	38.1	13.000	330.20
1.750	44.5	13.500	342.90
1.75	44.50	13.625	346.08
2.250	57.15	14.000	355.60
2.750	69.90	14.375	365.13
3.00	76.20	14.875	377.83
3.250	82.55	15.062	382.57
3.500	88.90	15.250	387.35
4.000	101.60	15.500	393.70
4.500	114.30	16.125	409.58
5.250	133.35	16.750	425.45
5.750	146.05	17.310	439.67
6.000	152.40	17.620	447.68
6.250	158.75	19.250	488.95
7.500	190.50		

NOTES:

1. Dimensions are in inches.
2. Metric equivalents are given for information only.
3. All cavities are 2.75 inches deep (69.9 mm) except as noted:

   (2) Cavity depth is 1.0 inch (25.4 mm).

   (3) Cavity depth of 1.75 inches (44.5 mm).

   (4) Area available for future expansion.

FIGURE 5. Cavity dimensions for compartment C - Continued.

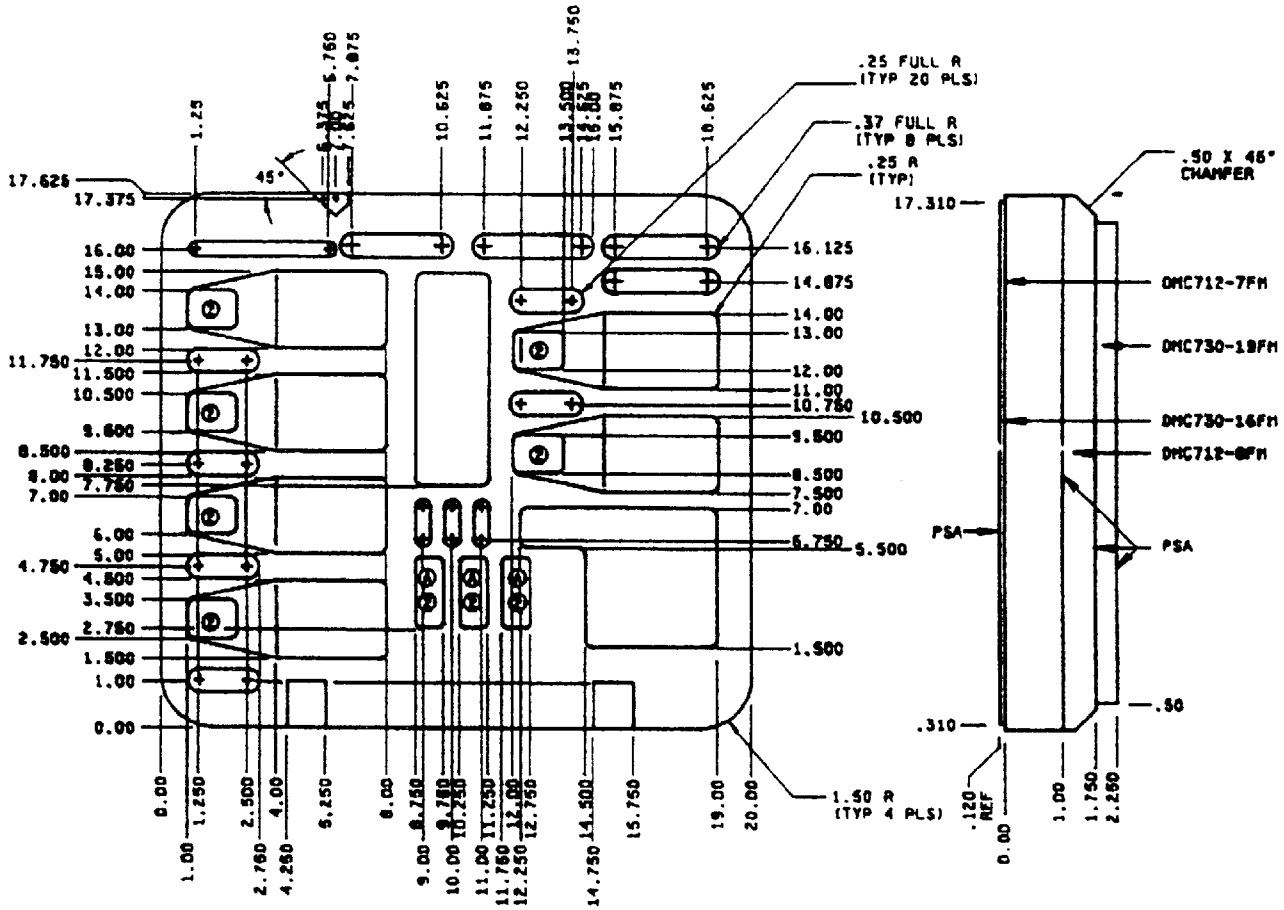

FIGURE 6. Cavity dimensions for compartment D.

Inches	mm	Inches	mm
.120	3.05	9.750	247.65
.25	6.4	10.00	254.00
.310	7.87	10.250	260.35
.50	12.7	10.500	266.70
1.00	25.4	10.625	269.88
1.250	31.75	10.750	273.05
1.50	38.1	11.00	279.40
1.500	38.10	11.250	285.75
1.750	44.45	11.500	292.10
1.75	44.45	11.750	298.45
2.500	63.50	11.875	301.63
2.750	69.85	12.00	304.8
3.500	88.90	12.250	311.15
4.00	101.60	12.750	323.85
4.250	107.95	13.00	330.2
4.500	114.30	13.500	342.90
4.750	120.65	13.750	349.25
5.00	127.0	14.00	355.6
5.250	133.35	14.500	368.30
5.500	139.70	14.625	371.48
5.750	146.05	14.750	374.65
6.00	152.40	14.875	377.83
6.375	161.93	15.00	381.00
6.750	171.45	15.750	400.05
7.00	177.8	15.875	403.23
7.625	193.68	16.00	406.4
7.750	196.85	16.125	409.58
7.875	200.03	17.310	439.67
8.00	203.20	17.375	441.33
8.250	209.55	17.625	447.68
8.500	215.90	18.625	473.08
8.750	222.25	19.00	482.6
9.00	228.6	20.00	508.0
9.500	241.30		

NOTES:
1. Dimensions are in inches.
2. Metric equivalents are given for information only.
3. All cavities are 1.0 inch deep (25.4 mm) except as noted:

   (2) Cavity depth is 1.75 inches (44.5 mm).

FIGURE 6. Cavity dimensions for compartment D - Continued.

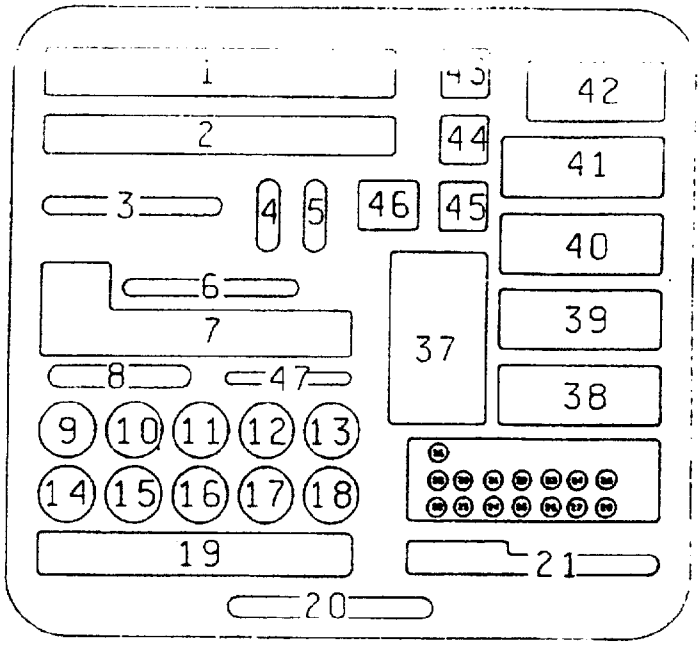

Item	Description	Item	Description
A1.	M22520/5-01 Crimp tool frame	A28.	M22520/2-10 Positioner
A2.	M8ND (Burndy) crimp tool with M22RVNT-9 die set attached	A29.	M22520/2-24 Positioner
A3.	MT0003 (Daniels) pliers RVR "TK" cable	A30.	M22520/2-31 Positioner
A4.	MT0002 (Daniels) puller RVR "TK" cable	A31.	K30C (Daniels) positioner
A5.	MT0001 (Daniels) puller EWS "RF" cable	A32.	K127 (Daniels) positioner
A6.	45-123 (Ideal) wire cutter	A33.	K160 (Daniels) positioner
A7.	M22520/31-01 crimping tool frame with M22520/31-02 single position head attached	A34.	K413 (Daniels) positioner
A8.	M22520/3-1 In-service inspection gauge	A35.	M22520/2-33 Positioner
A9.	TH18 (Daniels) turret head	A36.	M22520/2-34 Positioner
A10.	TH317 (Daniels) turret head	A37.	M81969/14-04 Installing/removal tool (10 supplied)
A11.	M22520/1-15 Single position head	A38.	M81969/14-02 Installing/removal tool (25 supplied)
A12.	TP545 (Daniels) single position head	A39.	M81969/14-01 Installing/removal tool (25 supplied)
A13.	TP120 (Daniels) single position head	A40.	M81969/14-03 Installing/removal tool (15 supplied)
A14.	M22520/1-02 Turret head	A41.	M81969/39-01 Installing/removal tool (20 supplied)
A15.	M22520/1-04 Turret head	A42.	M15570-22-1 (Deutsch) installing/removal tool (20 supplied)
A16.	M22520/1-12 Turret head	A43.	M22520/5-05 Die set
A17.	M22520/1-13 Turret head	A44.	M22520/5-41 Die set
A18.	M22520/1-14 Turret head	A45.	M22520/5-61 Die set
A19.	M22520/1-01 Crimp tool frame	A46.	M22520/5-100 Die set
A20.	74008 (Allen) 9/64 hex wrench	A47.	HC3-82 (Daniels die removal tool
A21.	M22520/2-01 Crimp tool frame		
A22.	M22520/2-02 Positioner		
A23.	M22520/2-03 Positioner		
A24.	M22520/2-06 Positioner		
A25.	M22520/2-07 Positioner		
A26.	M22520/2-08 Positioner		
A27.	M22520/2-09 Positioner		

FIGURE 7. Contents chart for compartment A.

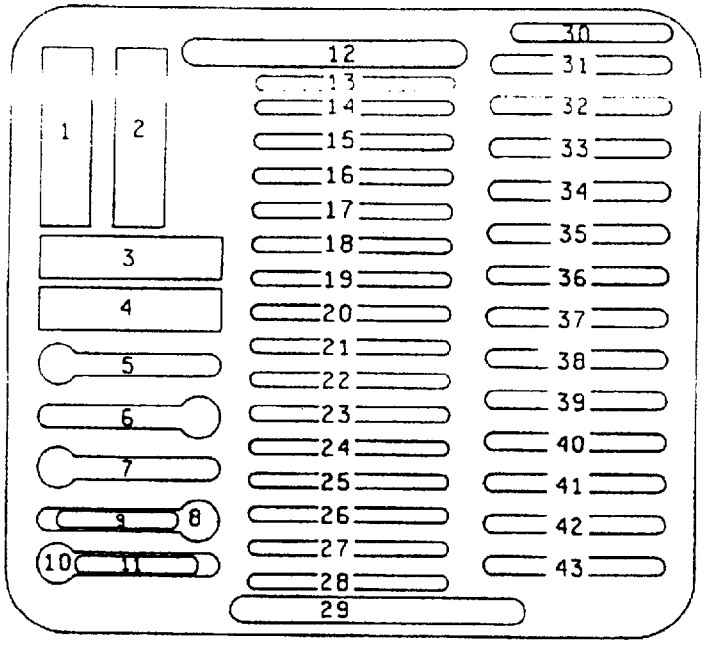

Item	Description
B1.	DAK51-8 (Daniels) installing tool
B2.	DAK51-20 (Daniels) installing tool
B3.	ON089564 (Amphenol) installing tool (2 supplied)
B4.	ON089565 (Amphenol) removal tool (2 supplied)
B5.	DRK51-20 (Daniels) removal tool
B6.	DRK51-12 (Daniels) removal tool
B7.	DRK51-8 (Daniels) removal tool
B8.	DRK110(Daniels) Removal tool handle
B9.	DRK110(Daniels) Removal tool probe
B10.	DRK105-1SA (Daniels) removal tool handle
B11.	DRK105-12-2 (Daniels) removal tool probe DRK105-16-2 (Daniels) removal tool probe DRK105-20-2 (Daniels) removal tool probe (2 supplied) DRK105-22-2 (Daniels) removal tool probe (2 supplied) DRK105-22M-2 (Daniels) removal tool probe (2 supplied)
B12.	M81969/19-11
B13.	M81969/8-02
B14.	M81969/8-01
B15.	M81969/8-04
B16.	M81969/8-03
B17.	M81969/8-06
B18.	M81969/8-05
B19.	M81969/8-08
B20.	M81969/8-07
B21.	M81969/8-10
B22.	M81969/8-11
B23.	DAK83-20 (Daniels) removal tool
B24.	DAK83-20 (Daniels) installing tool
B25.	DAK83-16 (Daniels) removal tool
B26.	DAK83-16 (Daniels) installing tool
B27.	DAK83-12 (Daniels) removal tool
B28.	DAK83-12 (Daniels) installing tool
B29.	M81969/19-10 Installing/removal tool
B30.	DRK229 (Daniels) removal tool
B31.	MS24256R12 Removal tool (2 supplied)
B32.	MS24256A20 Installing tool
B33.	MS24256A16 Installing tool
B34.	MS24256A12 Installing tool
B35.	DRK36 (Daniels) removal tool
B36.	114008 (Deutsch) removal tool (2 supplied) or DRK95-8 (Daniels) removal tool
B37.	DRK58-8 (Daniels) removal tool
B38.	DRK114-12 (Daniels) removal tool
B39.	DRK87-8 (Daniels) removal tool
B40.	DAK-87-8 (Daniels) installing tool
B41.	M81969/2-01 Installing tool
B42.	MS3344-23 Removal tool
B43.	MS3342-23 Removal tool

FIGURE 8. Contents chart for compartment B.

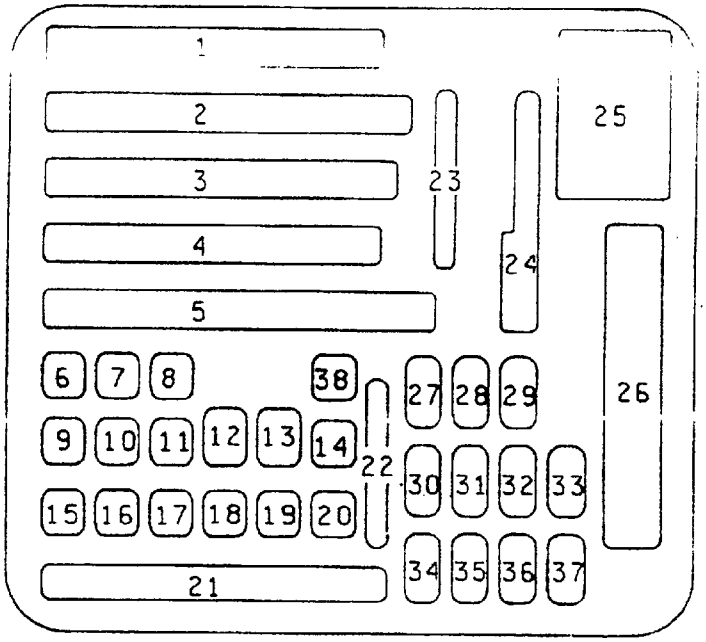

Item	Description	Item	Description
C1.	46673 (Amp) crimp tool	C20.	M22520/5-25 Die set
C2.	69324-1 (Amp) crimp tool	C21.	M22520/05-01 Crimp tool frame
C3.	59461 (Amp) crimp tool	C22.	HX3-82 (Daniels) die removal tool
C4.	46988 (Amp) crimp tool	C23.	74008 (Allen) 9/64 hex wrench
C5.	59500 (Amp) crimp tool	C24.	M22520/2-01 Crimp tool
C6.	Y308S (Daniels) die set	C25.	M81969/14-04 Installing/removal tool (10 supplied)
C7.	Y516 (Daniels) die set	C26.	M22520/1-01 Crimp tool frame
C8.	Y622 (Daniels) die set	C27.	45061-3 (Amp) die set
C9.	M22520/5-37 Die set	C28	45062-3 (Amp) die set
C10.	M22520/5-43 Die set	C29.	45063-3 (Amp) die set
C11.	M22520/5-45 Die set	C30.	45064-3 (Amp) die set
C12.	M22520/5-100 Die set	C31.	45065-3 (Amp) die set
C13.	M22520/5-101 Die set	C32.	45066-3 (Amp) die set
C14.	Y248 (Daniels) die set	C33.	45158-2 (Amp) die set
C15.	M22520/5-03 Die set	C34.	45238-2 (Amp) die set
C16.	M22520/5-09 Die set	C35.	45239-2 (Amp) die set
C17.	M22520/5-10 Die set	C36.	45240-2 (Amp) die set
C18.	M22520/5-11 Die set	C37.	45241-2 (Amp) die set
C19.	M22520/5-19 Die set	C38.	M22520/5-35 die set

FIGURE 9. Contents chart for compartment C.

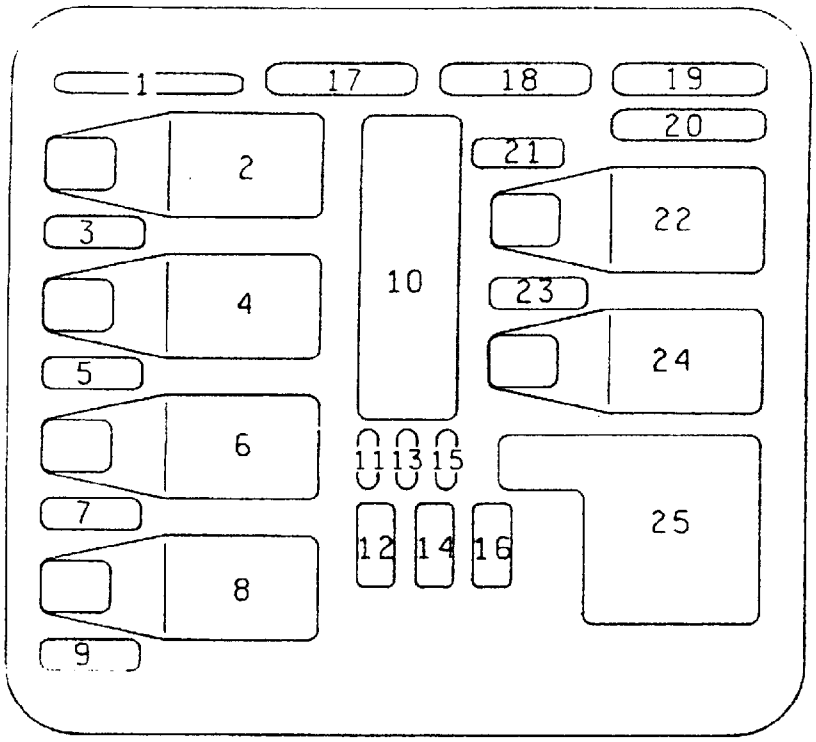

Item	Description	Item	Description
D1.	45-123 (Ideal) wire cutter	D14.	R-720 (Reon) outer jacket cutter (6 mil)
D2.	45-170 (Ideal) wire cutter	D15.	R-721 (Reon) spare blade set (8 mil)
D3.	L-5210 (Ideal) spare blade set	D16.	R-720 (Reon) outer jacket cutter (8 mil)
D4.	45-1654 (Ideal) wire stripper	D17.	11-10134 (Bendix) coaxial expander
D5.	45-1654-1 (Ideal) spare blade set	D18.	45-165 (Ideal) coaxial cable stripper
D6.	45-1633 (Ideal) wire stripper	D19.	45-163 (Ideal) coaxial cable stripper
D7.	45-1633-1 (Ideal) spare blade set	D20.	45-162 (Ideal) coaxial cable stripper
D8.	45-1609 (Ideal) wire stripper	D21.	L-5559 (Ideal) spare blade set
D9.	45-1609-1 (Ideal) spare blade set	D22.	45-176 (Ideal) wire stripper
D10.	45-164 (Ideal) coaxial cable stripper	D23	L-5211 (Ideal) spare blade set
D11.	R-701 (Reon) spare blade set	D24.	45-171 (Ideal) wire stripper
D12.	R-700 (Reon) twisted pair stripper	D25.	MS90387 2-tie wrap tool
D13.	R-721 (Reon) spare blade set (6 mil)		

FIGURE 10. Contents chart for compartment D.

NOTES: The following notes pertain to the instructions and tool selection charts found herein.

1. The charts contained herein are intended as a guide and a few special connectors may not be covered. When in doubt, refer to the applicable technical publication or consult with the connector manufacturer.

2. Turret heads have three separate positioners which are color coded. The tool selection chart (see table IV) shows the proper positioner color to use.

3. Hex dies with two cavities are stamped with cavity designators "A" and"B". The tool selection chart (see table IV) shows the proper cavity in parentheses.

4. Some size 20 contacts can be crimped with either the large or small tool. Both options are shown. Generally the small tool (M22520/2-01) is preferred.

5. Coaxial and triaxial cable may require special stripping instructions which are usually provided with the connector or contact.

6. Contact color code and BIN (Basic Identification Number) code information:

   a. MIL-C-39029 contacts - Each digit of the BIN code is designated on the contact by a color band as shown below. The width of the first color band is approximately twice the width of the second and third band.

0 - Black (blk)	5 - Green (grn)
1 - Brown (brn)	6 - Blue (blu)
2 - Red (red)	7 - Violet (vio)
3 - Orange (orn)	8 - Gray (gra)
4 - Yellow (yel)	9 - White (wht)

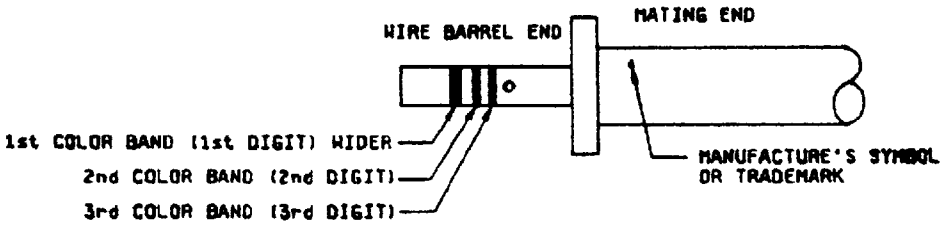

Example: Contact PIN M39029/31-228: Contact specification MIL-C-39029/31, BIN code 228 - color bands red, red, gray

   b. MIL-C-39012 inner contacts - Nonsignificant color bands for identification purposes only.

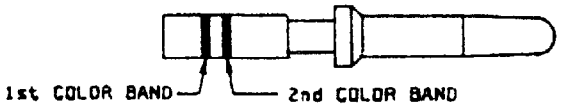

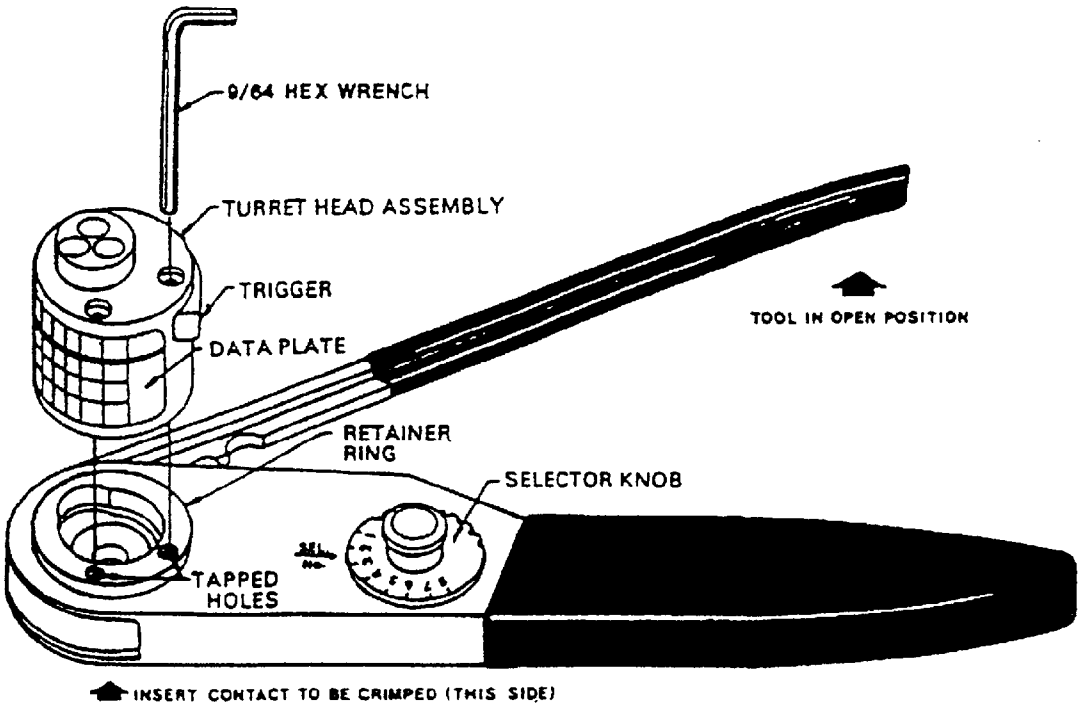

Instructions for changing turret head:

1. Press trigger which releases turret to indexing position.
2. Place selected turret head assembly onto retainer ring with screws lined up with tapped holes.
3. After turret head assembly is seated against ring, tighten socket head screws with 9/64 inch Allen wrench. Turret should index easily without binding.
4. To remove, loosen socket head screws until threads are disengaged from retainer ring and remove with a straight lifting motion.
5. All heads (single position, universal, and turret) are attached by means of two socket head screws.

FIGURE 11. Instructions for M22520/1-01 crimping tool.

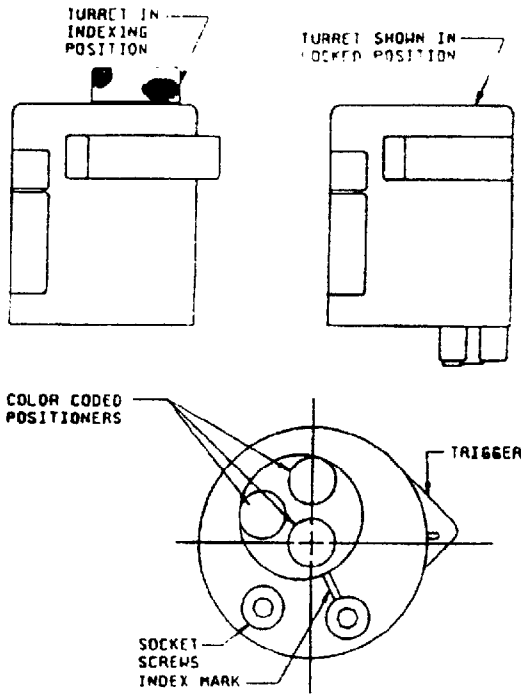

Instructions for indexing turret head assemblies:

1. **Press trigger which releases turret to indexing position.**
2. **Select positioner desired from color-coded data plate on the side of the turret head assembly.**
3. **Index turret until color-coded positioner is lined up with index mark on top of turret head assembly, at which time the trigger will position the turret.**
4. **Press turret until it snaps into locked position.**

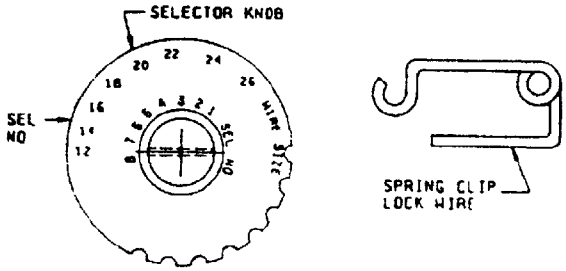

Instructions for using indentor closure selector:

1. Refer to data plate on turret head assembly. Below the wire size and opposite the contact size is listed the correct indentor closure number.
2. Remove the spring clip lock from the selector knob.
3. Tool must be in the open position when using selector.
4. Raise the selector knob and rotate to desired selector number.
5. Replace the spring clip. Tool is ready for use.
6. Repeat the instruction procedures when changing contact or wire sizes.

FIGURE 11. Instructions for M22520/2-01 crimping tool - Continued.

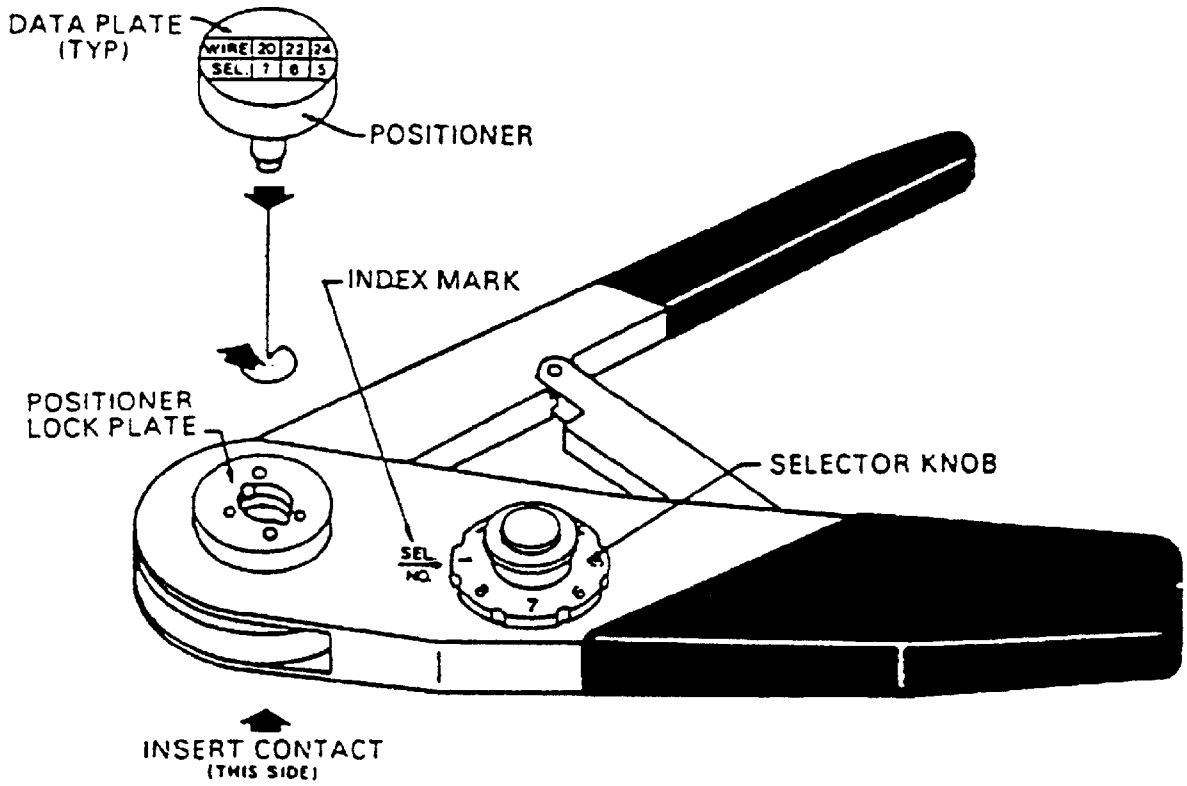

Instructions for changing positioners:

1. Select correct positioner for contact being crimped.
2. Insert positioner into positioner lock plate. Push and rotate 90° to install.
3. Determine correct selector setting for the wire size from the data plate on the end of the positioner.
4. Lift selector knob and rotate until selector number aligns with index mark.
5. Tool is now ready for use. Insert contact and complete crimping cycle.

FIGURE 12. Instructions for M22520/2-01 crimping tool.

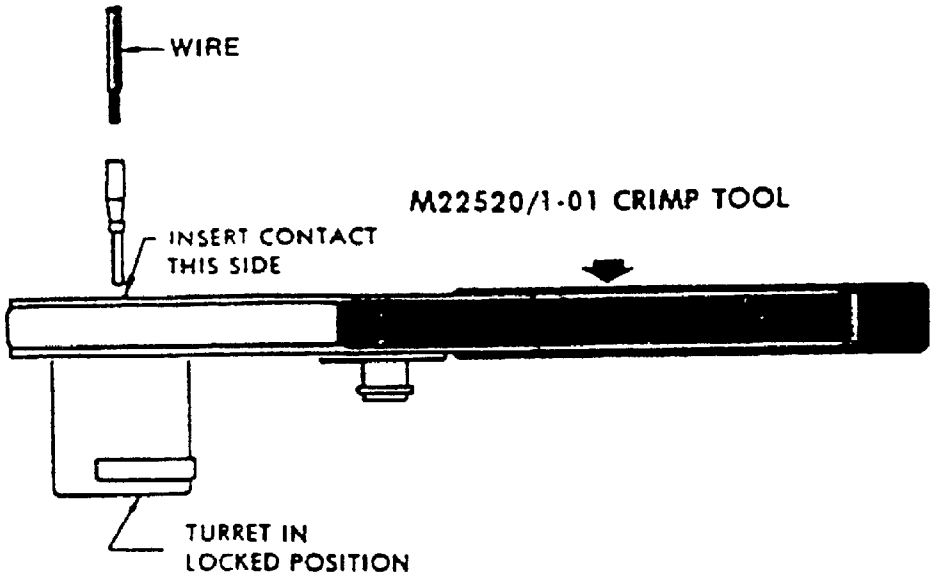

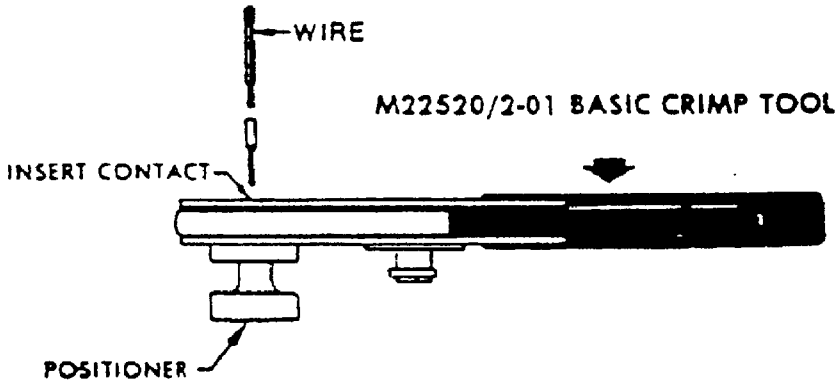

Crimping instructions:

1. Insert contact through indentor opening into positioner.
2. Insert wire into contact and hold securely to insure that it bottoms in contact. Close handles until tool bottoms and rachet kicks off. Release handles and remove crimped contact.

NOTE: After the crimping cycle is completed, inspect contact. Make sure that the wire is visible through the inspection hole in the contact and that there are no fractures in the contact.

FIGURE 12. Instructions for M22520/1-01 crimping tool - Continued.

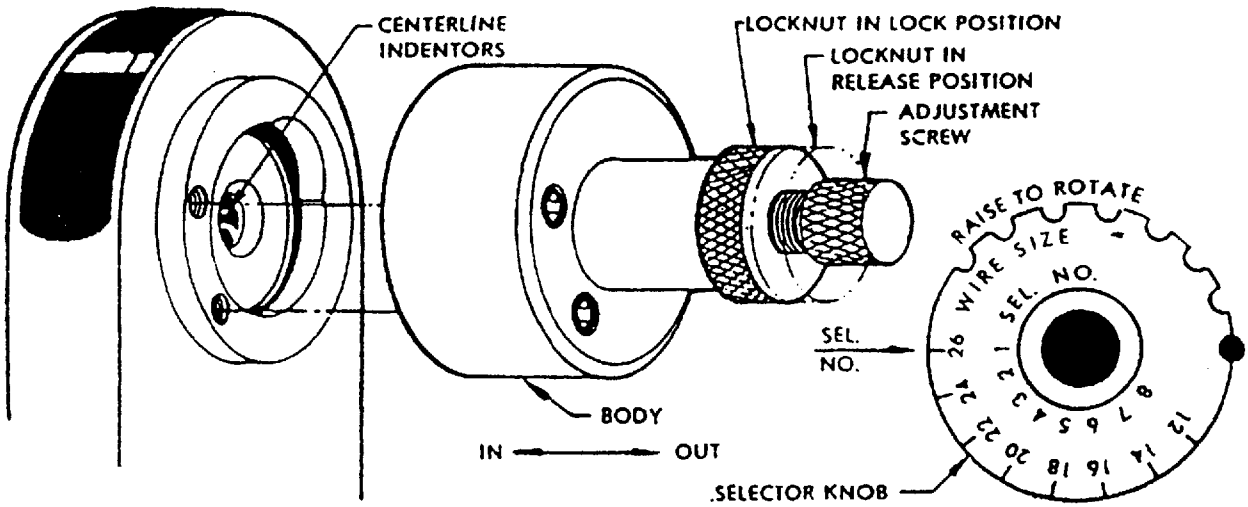

Introduction: M22520/1-05 universal head assembly is used with M22520/1-01 crimping tool to locate contacts horizontally and vertically between indentors (other than MS contacts).

Procedure:

1. Attach universal head assembly to M22520/1-01 basic crimping tool by means of socket head screws.
2. Raise and rotate selector knob until arrow is in line with the wire size to be crimped in the contact. Wire size settings are based on the use of silver-plated stranded wire in accordance with MIL-W-16878, crimped in military wire barrel in accordance with MS3190. For other contact/wire combinations, user must establish his own settings.
3. With lock nut in release position, turn adjustment screw in until it stops. Insert contact through indicator opening into positioner and adjust screw out until indentors are centered between inspection hole and barrel end of contact. When contact contains insulation cup, center between inspection hole and bottom of insulation cup.
4. Tighten lock nut to body and tool is ready for crimping operation.
5. Insert wire into contact and hold securely to insure that it bottoms in the contact. Close handles until tool bottoms and rachet kicks off. Release handles and remove crimped contact.

FIGURE 13. Instructions for M22520/1-05 universal position head.

Crimping tool PIN	Selector setting for inspection
M22520/1-01 (AF8)	4
M22520/2-01 (AFM8)	8

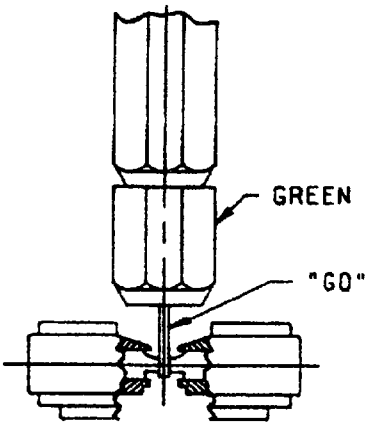

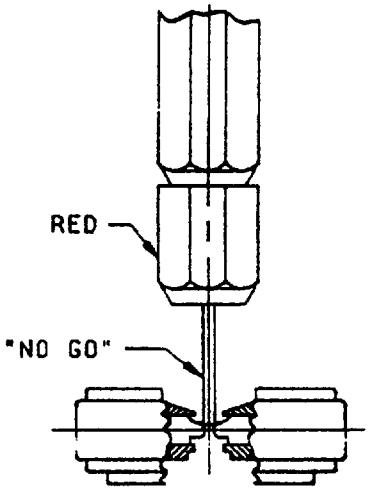

Close handles to fully closed position. Insert "GO" gauge as shown. Gauge must pass freely between indenter tips.

Close handles to fully closed position. Insert "NO GO" gauge as shown. Gauge must not enter between indenter tips.

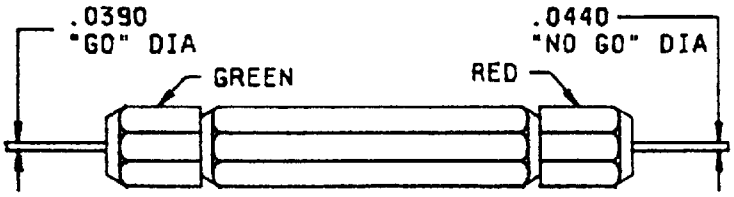

CAUTION: DO NOT CRIMP GAUGE.

FIGURE 14. M22520/3-1 inspection gauge.

Contact gauges are used to determine the size of the contact's mating so that the correct removal tool can be selected. The gauge size that mates closely with the contact in question indicates the contact's size.

Color	Contact size
Yellow	12
Blue	16
Red	20
Bronze	22

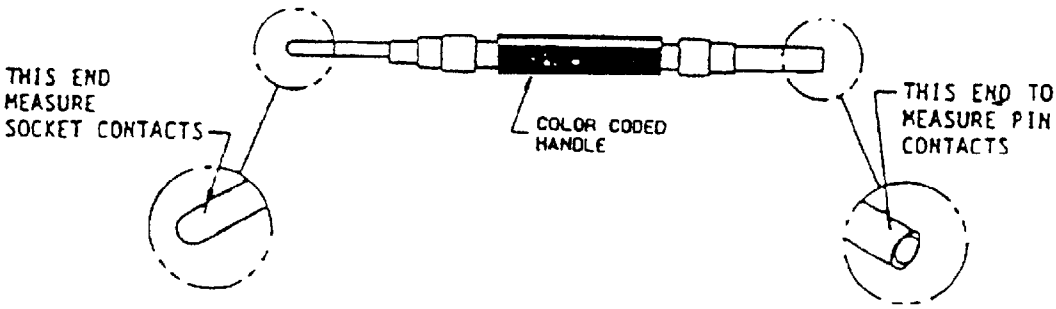

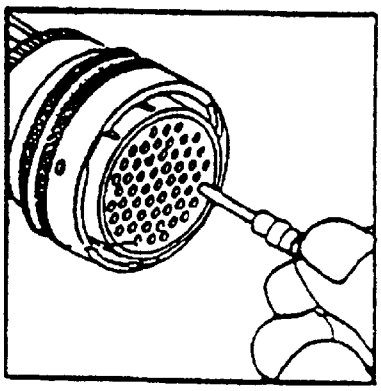

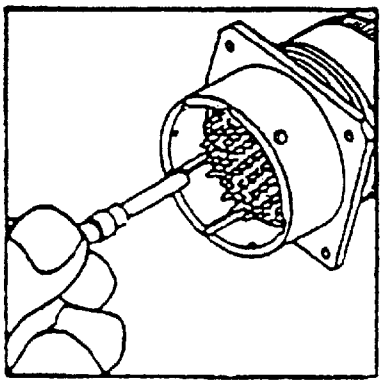

WARNING; MAKE SURE POWER IS DISCONNECTED BEFORE TOUCHING CONTACTS.

FIGURE 15. Contact gauges.

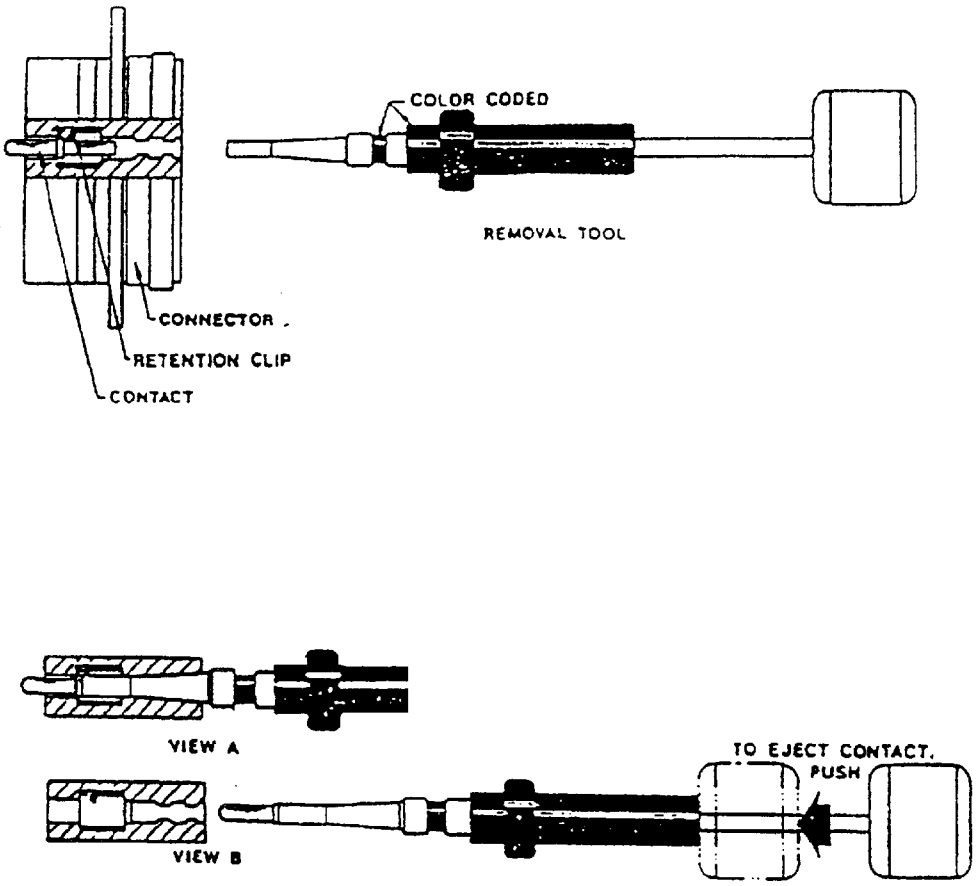

CAUTION; DO NOT TIP, SPREAD, OR ROTATE TOOL WHILE IN CONNECTOR.

NOTES:

1. Select correct removal tool (see table IV).
2. Slide tool into the connector through the sealing grommet and into the hard dielectric until tool stops against the contact shoulder (see view A).
3. At this stage of removal, tool will collapse contact retention clips to the point where they no longer retain control.
4. Grip tool and withdraw contact from connector (see view B).

FIGURE 16. Removal tools for unwired contacts.

Caution: Before attempting to remove dies from the tool, assure that all lock pins (see configuration C) have been removed. Failure to do so may result in serious damage to the tool.

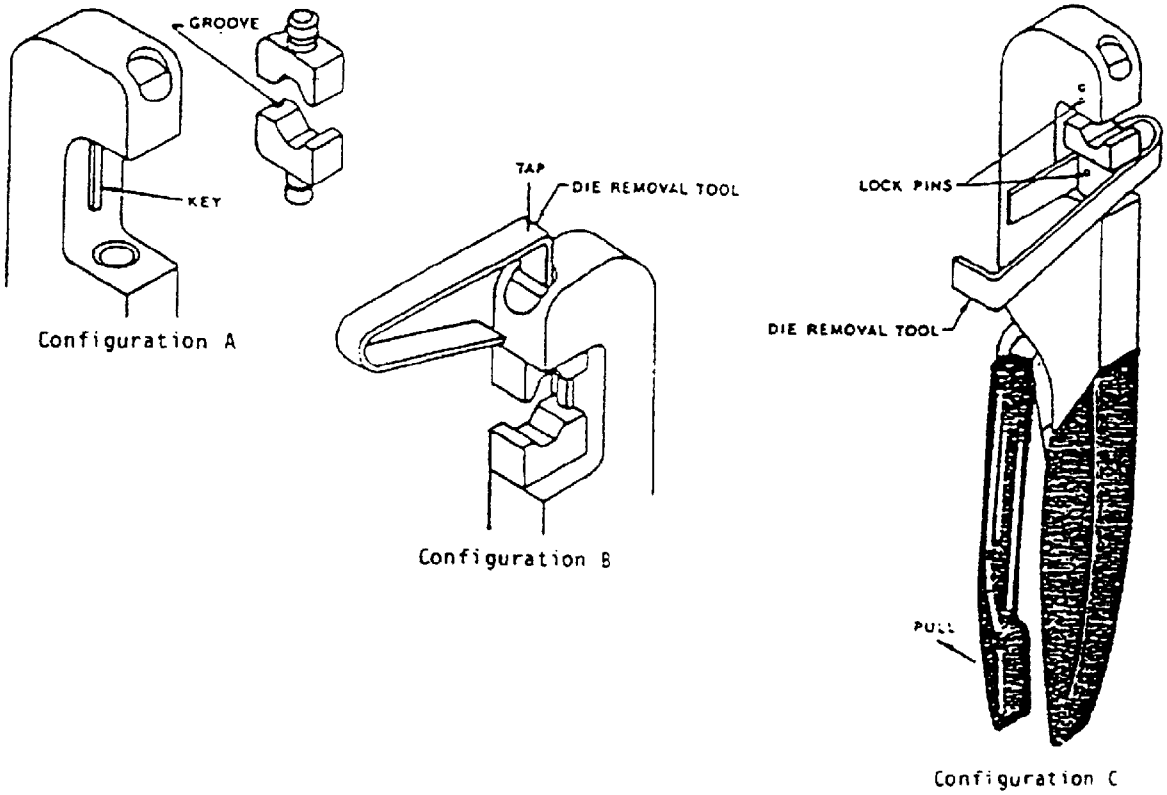

Die installation: Align the groove in the die with the key in the crimping tool and push the shank of the die into the hole (see configuration A). Close the handle to make sure the dies are properly seated and locked in place. The tool is now ready for use.

Die removal:

1. With the crimping tool handle open, place the die removal tool against the end of the knock-out pad and tap gently (see configuration B). The die will be released from the lock spring and ejected approximately .062 inch (1.57 mm). The die can now be removed by hand.
2. Close the crimping tool handle and slide the die removal tool between the die and the tool body (see configuration C). Pull the handle open with a snap action. The die will be released from the lock spring and can then be removed by hand.

NOTE: Die removal tool (PIN HX3-82) is furnished with crimping tool. If the die removal tool is not available, a rod .187 inch (4.75 mm) by 1.750 inches (44.45) approximately, may be used.

FIGURE 17. M22520/5-01 and M22520/10-01 crimp tools.

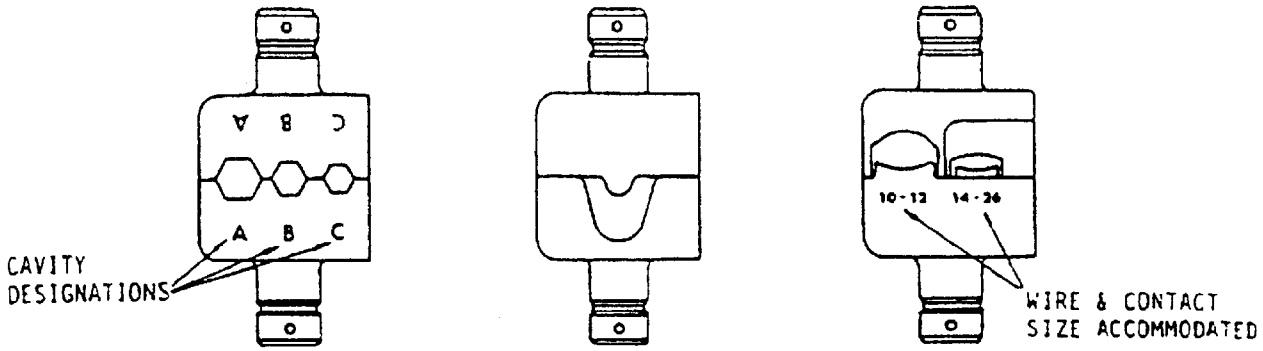

Hex die
1, 2, or 3 cavities

Contact die
Contact sizes 12, 10, 8, 4, and 0

Terminal die
(see figure 19)

HX3 (M22520/10) die set

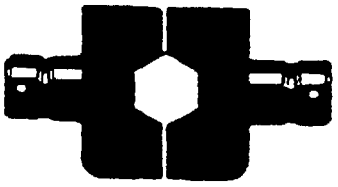

HX4 (M22520/5) die set

FIGURE 18. M22520/5 and M22520/10 die sets.

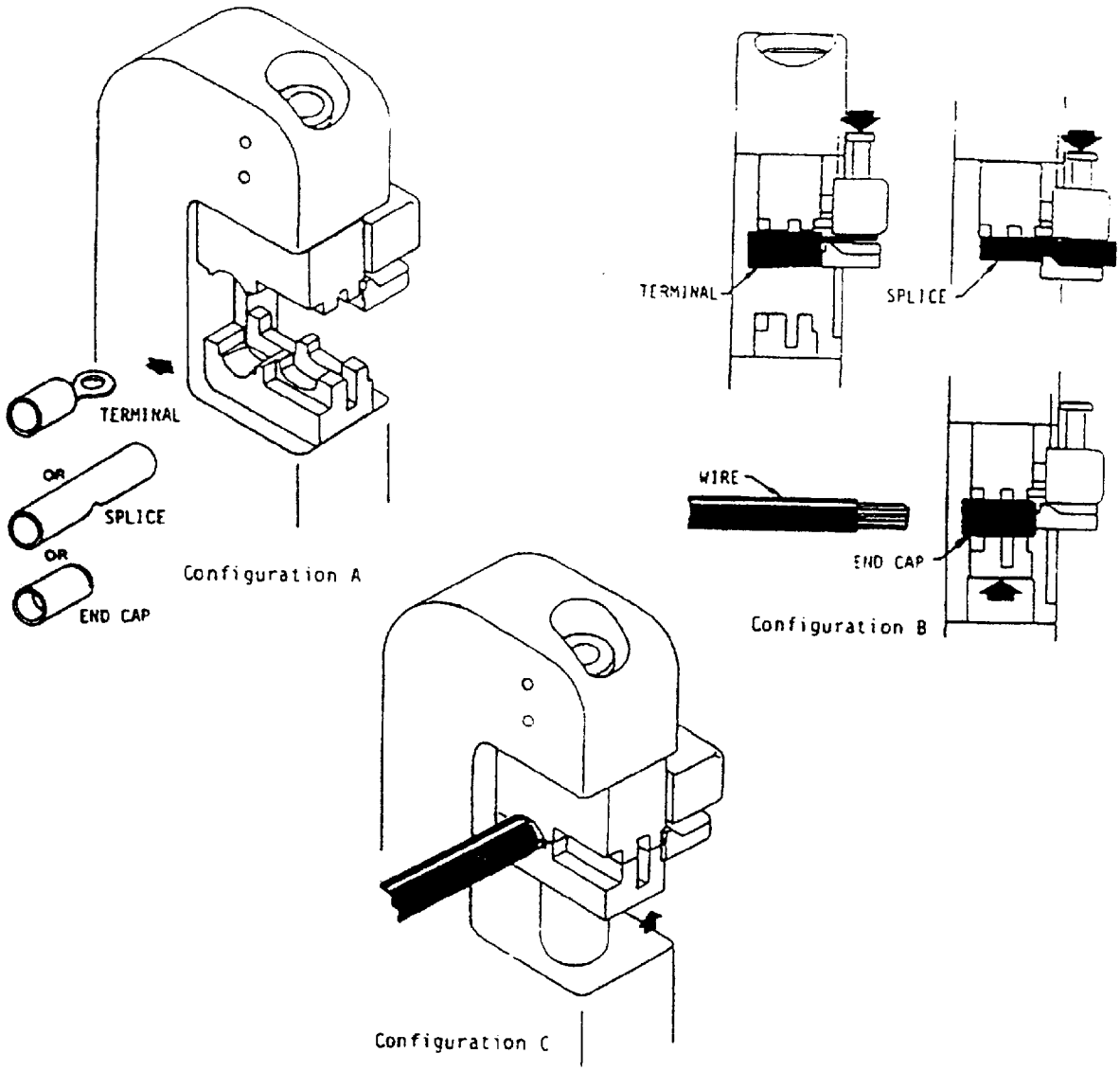

NOTES:

1. With dies open (see configuration A), place terminal, splice, or end cap in the proper cavity. Sizes are stamped below each cavity on the side of the die.
2. Locate terminal, splice, or end cap with locator (see configuration B). The terminal should locate with tongue between the arms of the locator. Splice is centered with notch in the splice resting on the locator. End caps locate against the face of the locator. Insert wire to proper depth.
3. Close handle of tool until dies are closed and the rachet releases. The crimp is now complete (see configuration C)

FIGURE 19. Crimping instructions for M22520/5-01 and M22520/10-01 crimp tools.

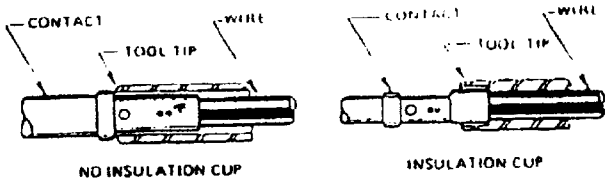

Configuration A

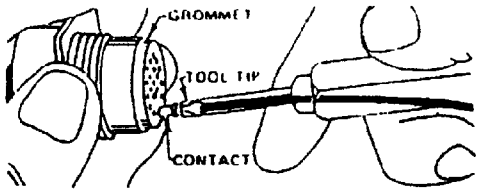

Configuration B

Operating instructions for installing tools:

1. Select correct insertion tool and place contact/wire assembly in tool.

   a. Number 20 contact with insulation cups are inserted by sliding the cup into the front end of the insertion tip until the end of the cup butts against shoulder in insertion tip (see configuration A).
   b. Contacts without insulation cups are inserted by sliding the wire barrel into the front end of the insertion tip until contact shoulder butts against insertion tip (see configuration A).

2. Align tool and contact axially with grommet hole and carefully guide contact through grommet into lock position (see configuration B).

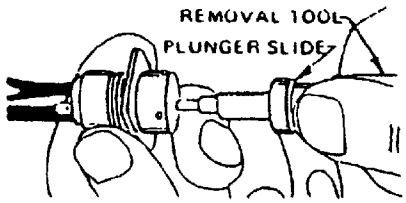

Configuration C

Operating instructions for removal tools:

1. Select correct contact removal tool.
2. Tool must be held in straight line, parallel to the contact and square to the connector face.
3. Insert removal tool tip into the connector. Push plunger slide forward to eject contact (see configuration C).
4. Plunger slide must remain in retracted position as removal tool tip is inserted into the connector.

FIGURE 20. Installing and removal tools for front release connectors.

The wire strippers are not adjustable. If, after extended use, they do not perform satisfactorily, the blades must be replaced. The replacement blade PIN is etched on the blade, i.e., L-5562, 45-1608-1, etc.

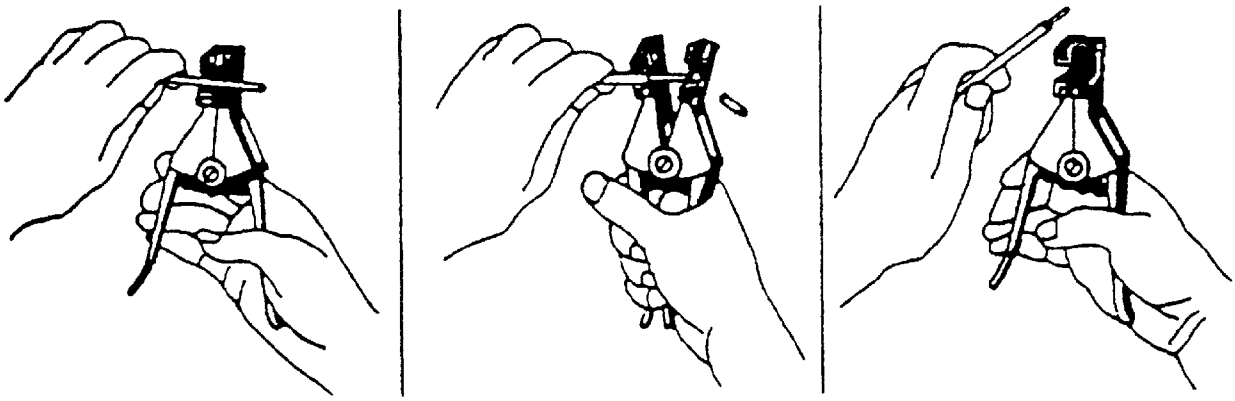

Step 1: Select correct hole to match wire gauge.

Step 2: Blades remain open until wire is removed. Be careful not to nick or cut strands.

Step 3: Stripping is complete.

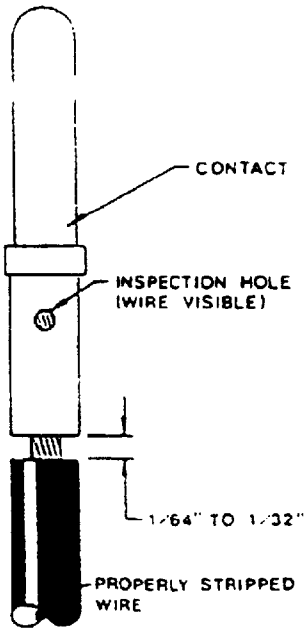

Properly stripped wire.

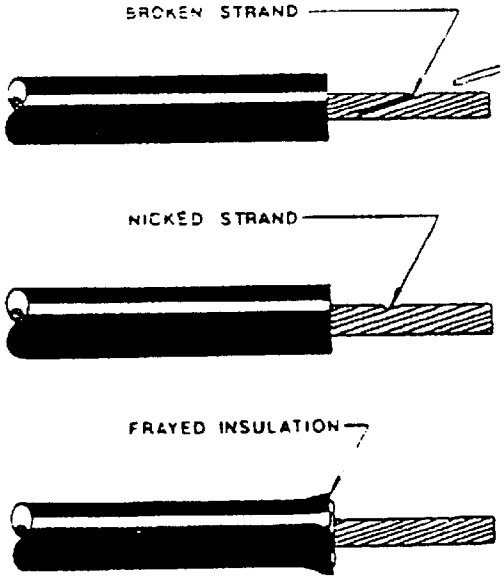

The conditions shown above are not acceptable.

FIGURE 21. Wire stripper instructions.

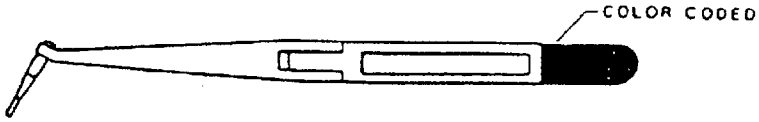

Color	Contact size	PIN
Yellow	12	M81969/8-09
Blue	16	M81969/8-07
Red	20	M81969/8-05
Brown	22	M81969/8-03
Black	22D, 22M	M81969/8-01

Installing Tool:

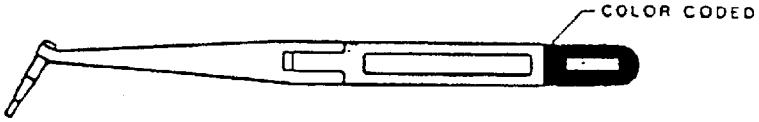

Color	Contact size	PIN
Yellow	12	M81969/8-10
Blue	16	M81969/8-08
Red	20	M81969/8-06
Brown	22	M81969/8-04
Black	22D, 22M	M81969/8-02

Removal Tool:

To install contacts:

1. Open the tool tips by squeezing the handles and slip the tips around the wire insulation (position 1, configuration A). Slide the tool along the wire until the tip ends butt against the shoulder on the contact (position 2, configuration A).
2. Carefully push the contact forward and directly in line with the grommet hole until the contact is felt to snap into position (see configuration B).
3. Slide the tool back along the wire insulation until it clears the grommet and then remove the tool from the wire.

To remove contacts:

1. Open the tool tips sufficiently to be placed around the wire insulation. Slide the tool down the wire until the tool tips enter the grommet and come to a positive stop (see configuration C). A slight increase in resistance will be noticed just before the tips bottom. This will spread the retention clip and release its hold on the contact.
2. Holding the tool tip firmly against the positive stop on the contact, grip the wire and simultaneously remove the tool, contact, and wire.

Caution: The tips on installing and removal tools used on small contacts (i.e., M81969/8-01 and M81969/8- 02) have very thin wall sections. This causes them to have sharp edges which can cut the wire insulation or connector sealing grommet. Do not squeeze, spread, tip, or rotate the tweezer while entering the connector grommet.

FIGURE 22. Tweezer type installing and removal tools for rear release connectors.

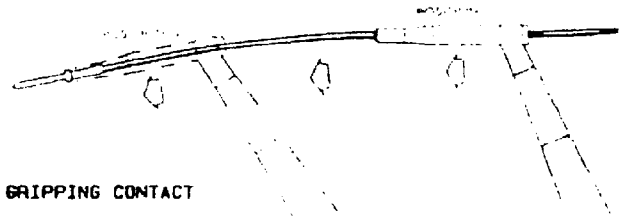

Configuration A

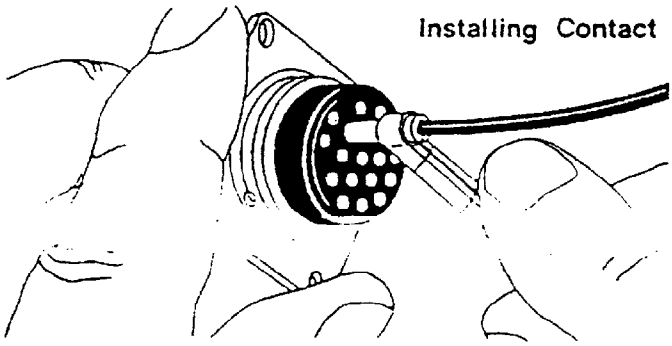

Configuration B

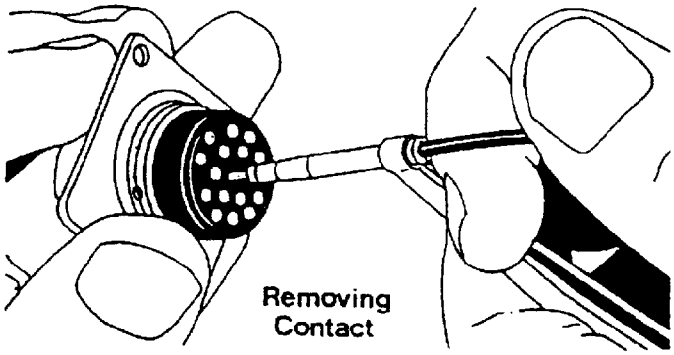

Configuration C

FIGURE 22. Tweezer type installing and removal tools for rear release connectors - Continued.

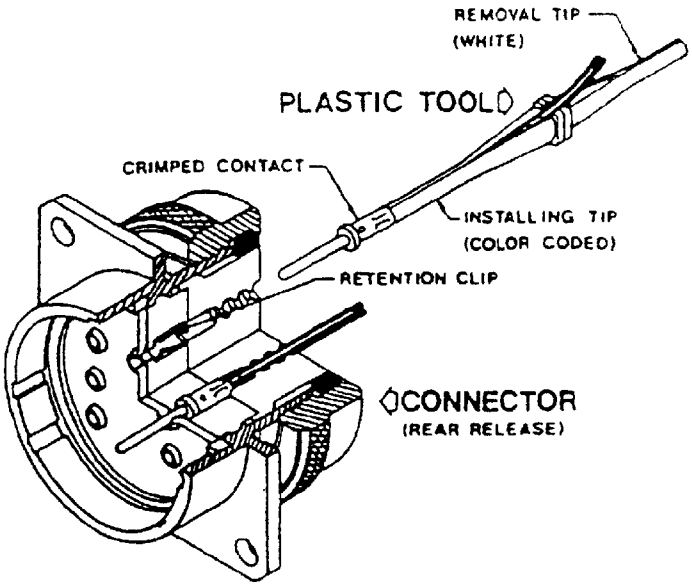

MATED PLUG AND RECEPTACLE

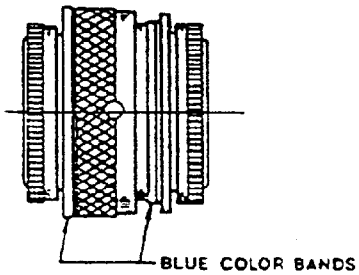

Note: Connectors having contacts which are installed and removed from the rear of the connector have blue color bands around them.

FIGURE 23. Rear release connectors.

Installing (colored end)

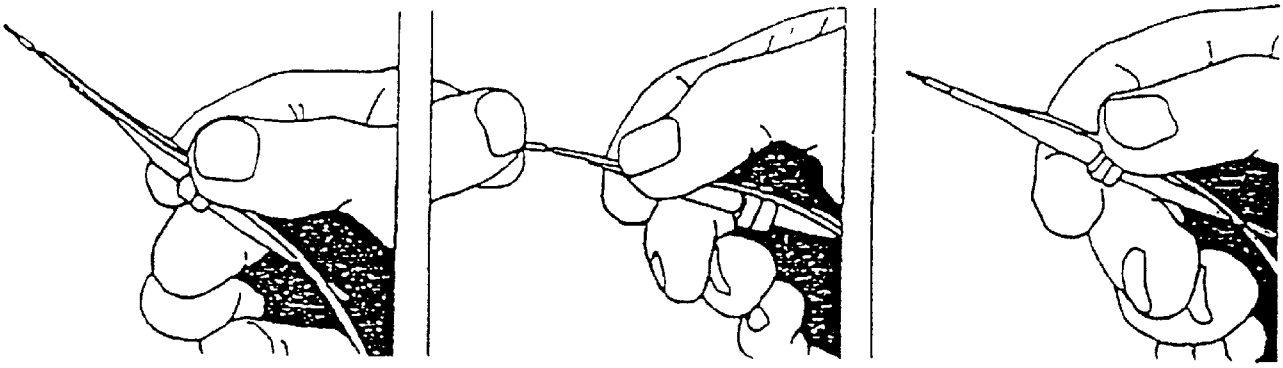

Hold the insertion half of the tool (colored) between the thumb and forefinger and lay the wire to be inserted along the slot, leaving about .500 inch (12.70 mm) protruding from the end of the tool to the crimp barrel of the contact.

Squeeze the wire hard into the tool at the tip, between the thumb and forefinger, and at the same time quickly pull the protruding wire with the other hand away from the tool

The wire will now have snapped into place. Pull it back through the tool until the tip seats on the back end of the crimp barrel.

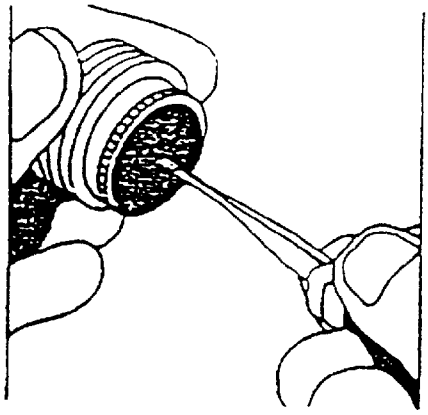

Holding the connector with the rear seal facing you, slowly push the contact straight into the connector seal.

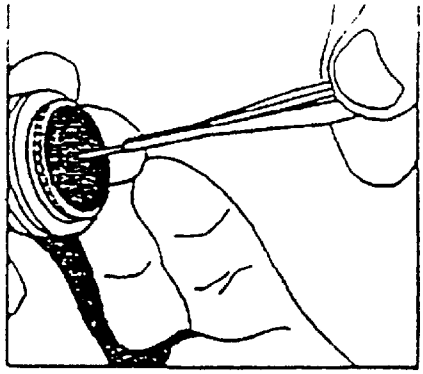

A firm stop will be evident when the contact positively seats in in the connector.

FIGURE 24. Plastic tool instructions.

Removal (white end)

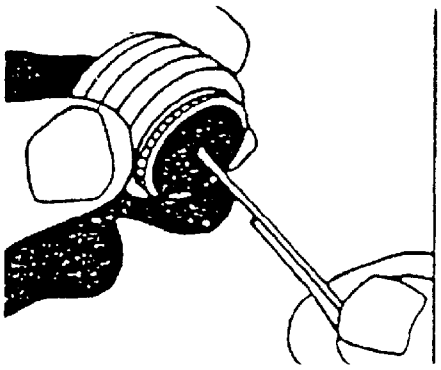

With the rear of the connector facing you, lay the wire of the contact to be removed along the slot of the removal half (white) of the tool, leaving about .500 inch (12.70 mm) from the end of the tool to the rear of the connector.

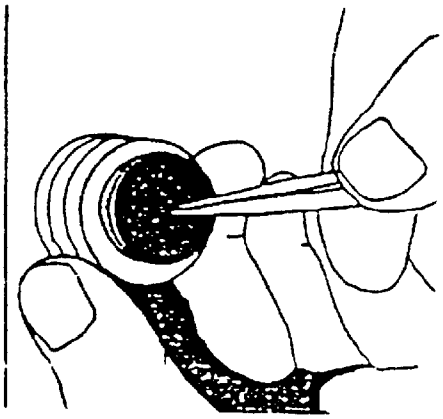

Squeeze the wire hard into the tool between the thumb and forefinger about .250 inch (6.35 mm) from the tip and at the same time quickly pull the connector away from the tool with the other hand.

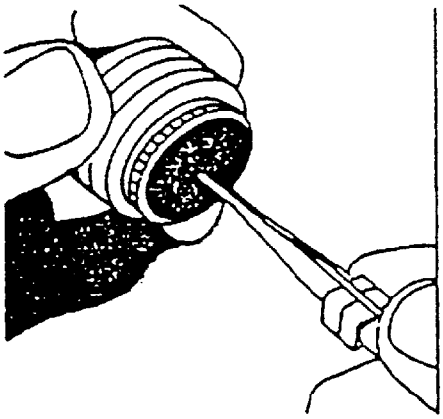

The wire will now have snapped into place. Slide the tool down over the wire and into the rear seal and push it slowly into the connector until a positive resistance is felt. At this time, the contact retaining clip is in the unlocked position.

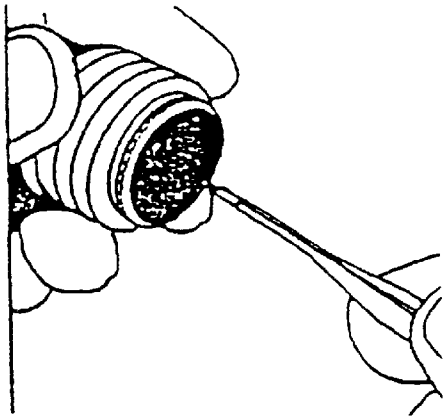

Press the wire of the contact to be removed against the serrations of the plastic tool and pull both the tool and the contact-wire assembly out of connector.

Caution: Do not tip, spread, or rotate the tool while in the connector.

FIGURE 24. Plastic tool instructions - Continued.

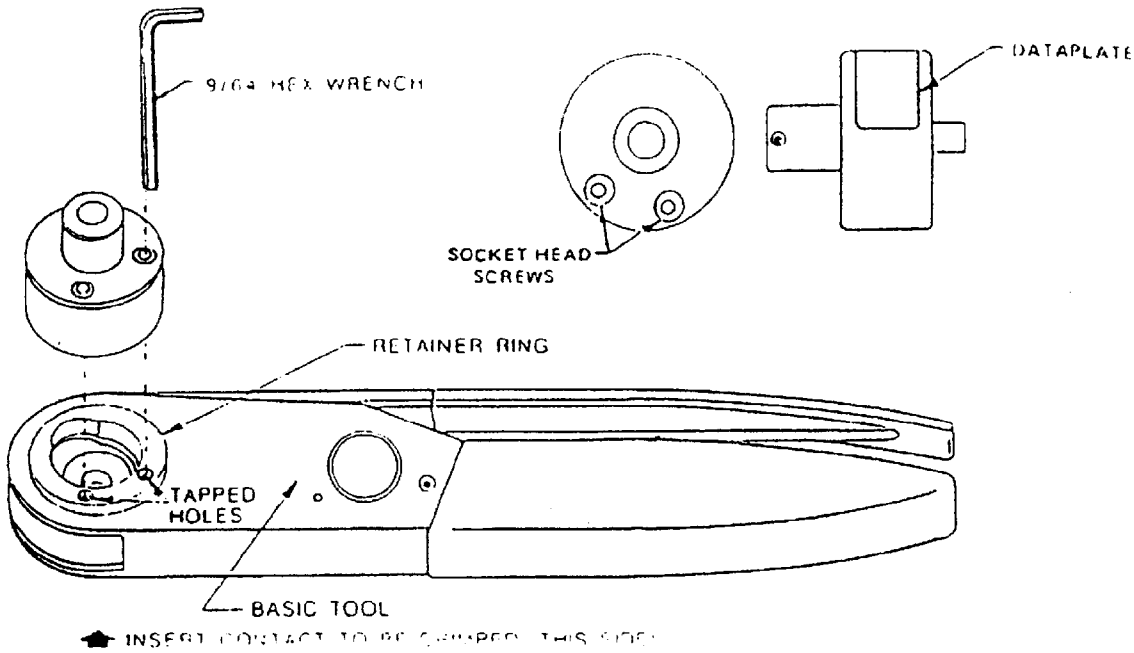

Description	PIN	Daniels PIN
Complete tool with positioner	—	GS200
Crimping tool only	M22520/31-01	GS200-1
Positioner only	M22520/31-02	G2P330
Inspection gauge	M22520/XX-XX	G140

Introduction: The M22520/31-01 crimping tool has a single die closure which produces a circular crimp on outer ferrules of various coaxial contacts. The crimping tool (M22520/31-01) and the single position head (M22520/31-02) are supplied as an assembly but may be acquired separately.

Instructions for changing positioner:

1. Place positioner onto retainer ring with screws lined up with tapped holes.
2. After positioner is seated against ring, tighten socket head screws with 9/64 inch Allen wrench.
3. To remove, loosen socket head screws until threads are disengaged from retainer ring and remove with a straight lifting motion.
4. All positioners are attached by means of two socket head screws.
5. Handles of the tool must be in the open position before attempting to install or remove positioner.

FIGURE 25. Instructions for M22520/31-01 crimping tool.

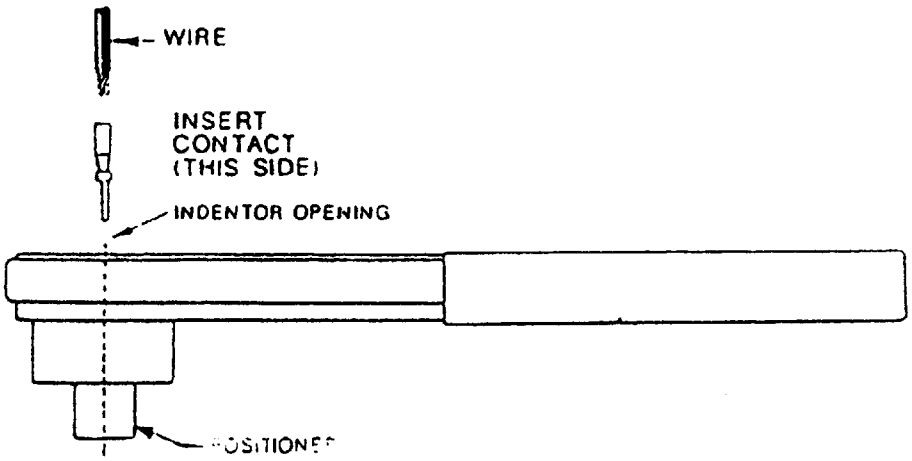

Crimping instructions:

1. Insert contact through indentor opening into positioner.
2. Insert wire into contact and hold securely to insure that it bottoms in contact. Close handles until tool bottoms and rachet "kicks off". Release handles and remove crimped contact.

NOTE: After the crimping cycle is completed, inspect contact. Make sure that the wire is visible through the inspection hole in the contact and that there are no fractures in the contact.

FIGURE 25. Instructions for M22520/31-01 crimping tool - Continued.

Crimping tool PIN	A go dia	B no go dia	Daniel PIN
M22520/31-01	.1420 (3.607 mm)	.1460 (3.708 mm)	G140

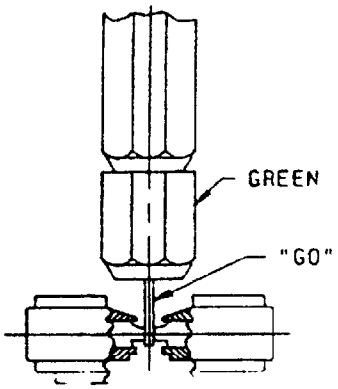

"GO" GAUGING

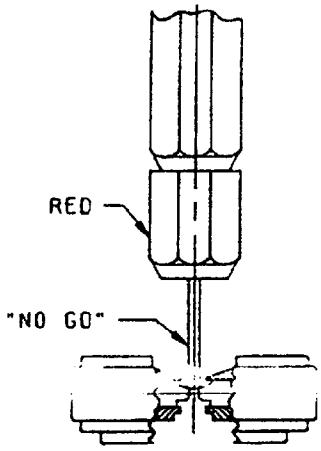

"NO GO" GAUGING

Close handles to fully closed position. Insert "GO" gauge as shown. Gauge must pass freely between indenter tips.

Close handles to fully closed position. Insert "NO GO" gauge as shown. Gauge must not enter between indenter tips.

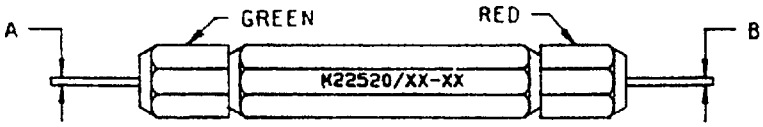

DANIELS G140 GAUGE

CAUTION: DO NOT CRIMP GAUGE!!

FIGURE 26. Daniels G140 inspection gauge.

The Ideal cable tie installation tools listed below have been designed to tension and cut off self-locking nylon cable ties in a quick and consistent manner. The applied tension can be varied by making an operational adjustment to the tool. Excess tie is cut off automatically.

Cable tie PIN	Installing tool (ref)	Tool tension setting	
		MS90387-1	MS90387-2
MS3367-1, -2, and -7	MS90387-1*	6 to 8	5 to 8
MS3367-3 and -6	MS90387-2		
MS3367-4	MS90387-1*	1 to 3	
MS3367-5	MS90387-1*	3 to 5	
MS3367-1, 2, 3, and 4	MS90387-1*	6 to 8	
MS3368-5	MS90387-1*	1 to 3	
* MS90387-1 installing tool is not provided in this kit			

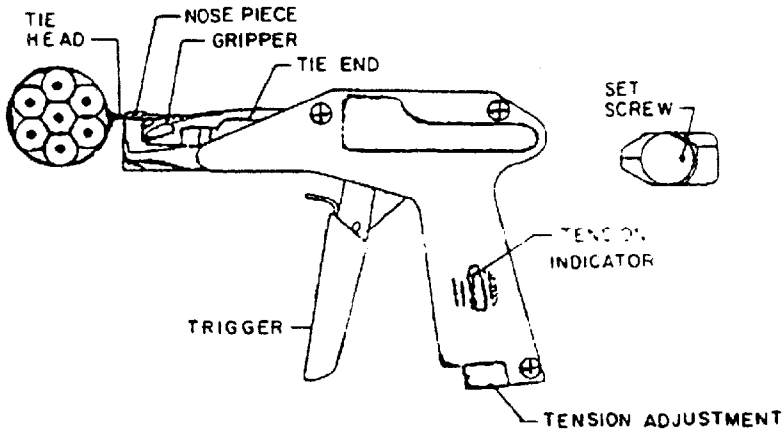

Tool adjustments: The only required adjustment of this tool is the setting of the cable tie tension listed above. To set the required tension, turn the adjustment knob at the base of the handle (clockwise movement increases tension, counterclockwise movement decreases tension) until the line on the indicator block is opposite the numbered line on the handle which corresponds to the designated indicator setting for the tie being applied. The tension setting can be locked in place by tightening the set screw on the face of the adjustment knob using a .050 (1.27 mm) hex key. This is an added feature and is not necessarily required to operate the tool.

Tool operation:

1. Loop cable tie under and around the bundle of wires.
2. Thread the tip through the rectangular slot in the head of the tie.
3. Pull the tip until the tie fits snugly about the bundle.
4. With the tool at the proper tension setting, slide the tail of the tie into the side opening in the nose piece, keeping the tool close to the head of the tis (see above). Make sure that the tie bottom is in the nose piece and is engaged by the gripper over its entire width.
5. Scueeze the trigger until the cut off occurs. More than one stroke may be required to properly tension loose bundles. The tie is now complete.
6. After the cut off, the tool's gripper will hold cut off portion of the tie until the trigger is released.

FIGURE 27. Operating instructions for cable tie installation tool.

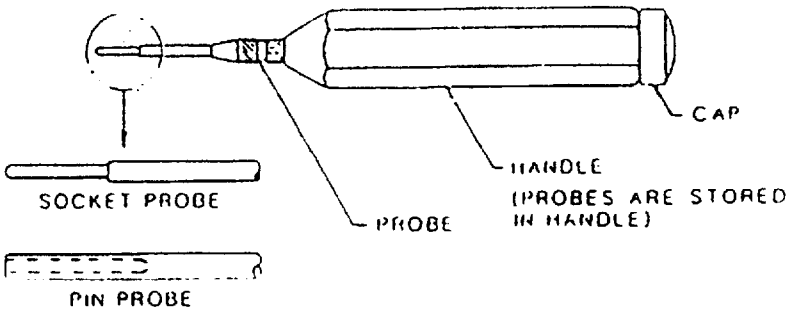

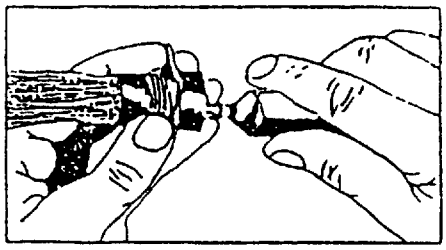

Instructions: Contacts may be removed if necessary for replacement. With straight type assemblies, loosen the bar clamp and unscrew the clamp assembly from the connector shell. With elbow assemblies, remove the back cover and loosen the bar clamp. Then unscrew the knurled nut which holes the elbow to the bar clamp. Slide all parts out of the way along the wires. Working from the front face of the connector, push the contacts back through the grommet as shown.

FIGURE 28. Instructions for Danials push-type removal tools.

Introduction: The AMP 69324 crimp tool (see configuration A) is recommended for crimping AMP Solistrand terminals and splices and AMP high temperature and heat resistant Strato-therm uninsulated terminals and splices on AWG no. 22 through AWG no. 10 only. The wire size is stamped on the tool adjacent to each of the three crimping dies.

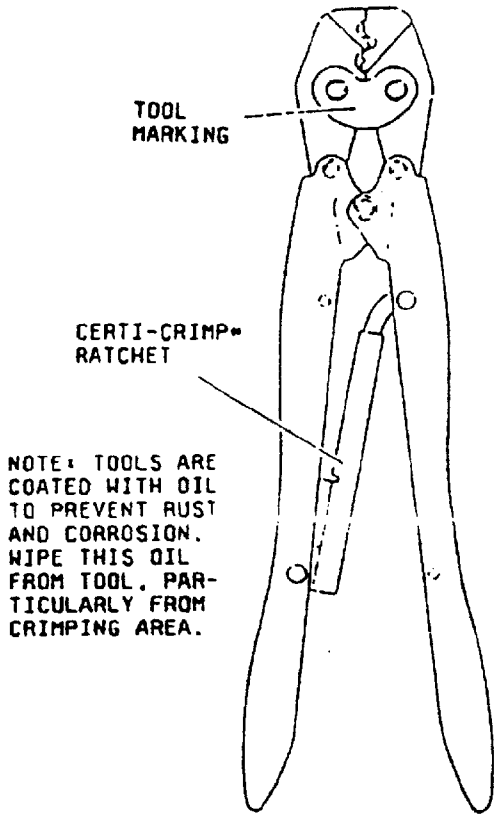

Configuration A

FIGURE 29. Instructions for AMP 69324 crimp tool.

Wire stripping and crimping procedures:

1. Strip wire to dimensions shown on configuration B.
2. To open crimping jaws, close handles until Certi-crimp* rachet releases (see configuration A). Note that once rachet is engaged, handles cannot be opened until they are fully closed.
3. Place terminal or splice in crimping jaws as shown on configurations C, D, or E. For best results, when brazed seam on terminal or splice is visible, position seam toward indenter.
4. Close handles until terminal or splice is held firmly in place. Do not deform terminal or splice barrel.
5. Insert stripped wire into terminal or splice barrel.
6. To complete crimp, close handles until Certi-crimp* rachet releases. Handles will open automatically and crimped item may be removed.
7. To crimp other half of butt splice, remove it and reposition uncrimped half in tool and follow same procedure used to crimp first half of splice.

Color code:

1. Strato-therm high temperature terminals and splices are color coded orange.
2. Solistrand terminals and splices and Strato-therm heat resistant terminals and splices are not color coded.

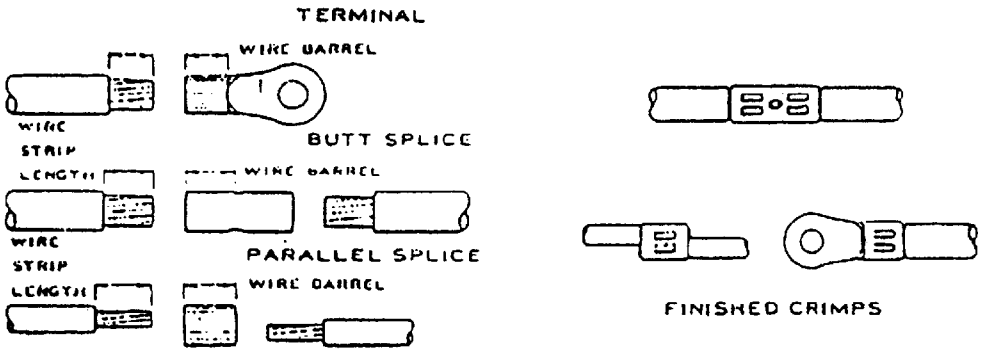

Tool no.	Wire size	Wire stripping length					
		Terminal		Butt splice		Parallel	
		Min	Max	Min	Max	Min	Max
69324	22-16	.171 (4.35)	.203 (5.16)	.250 (6.35)	.281 (7.14)	.312 (7.92)	.343 (8.71)
	16-14						
	12-10	.250 (6.35)	.281 (7.14)				

Metric equivalents are in parentheses.

Configuration B

* Trademark of AMP Inc.

FIGURE 29. Instructions for AMP 69324 crimp tool - Continued.

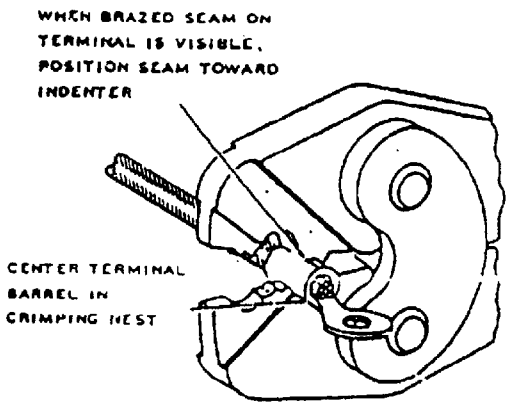

Configuration C

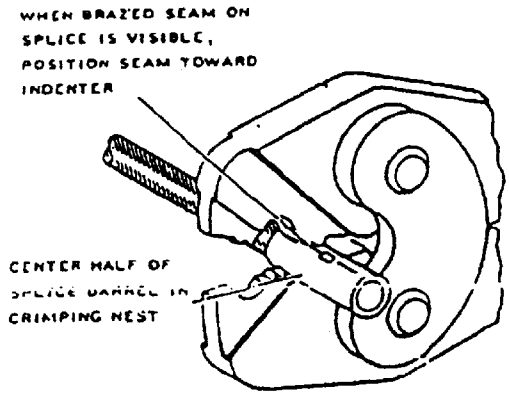

Configuration D

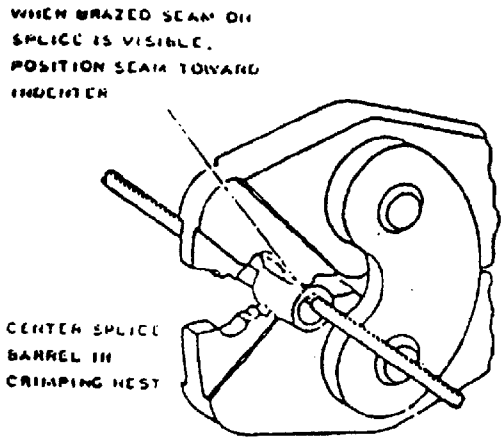

Configuration E

FIGURE 29. Instructions for AMP 69324 crimp tool - Continued.

Maintenance:

1. Lubrication - Keep all pins, pivot points, and bearing surfaces lubricated with a good grade SAE no. 20 motor oil.
2. Visual inspection of die crimp contour - Inspect the tool die crimping areas for worn, broken, or chipped conditions. Although dies may gauge within permissible limits, worn or broken crimping die areas are objectionable and can affect the quality of the crimp. Examples of possible damaged areas of the crimping dies are shown on configuration F.

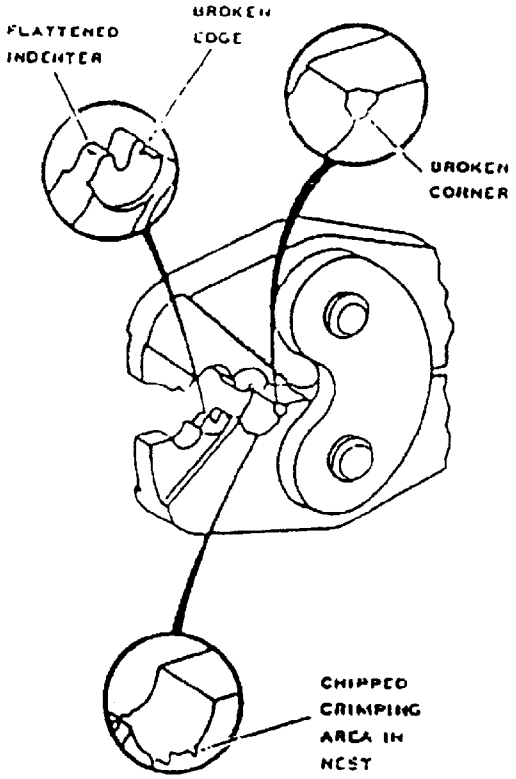

Configuration F

FIGURE 29. Instructions for AMP 69324 crimp tool - Continued.

Maintenance - Continued:

3. Die closure inspection - It is recommended that the tool die closure be measured periodically and the Certi-crimp* rachet feature be checked once a month. This will ensure that the tool will continue to provide uniform terminations.
4. Tool die closure measurement - This measurement is accomplished using a "GO-NO GO" plug gauge. A suggested design is shown on configuration G. The "GO-NO GO" dimensions of the plug gauges for the wire barrel crimping dies are also listed on configuration G.

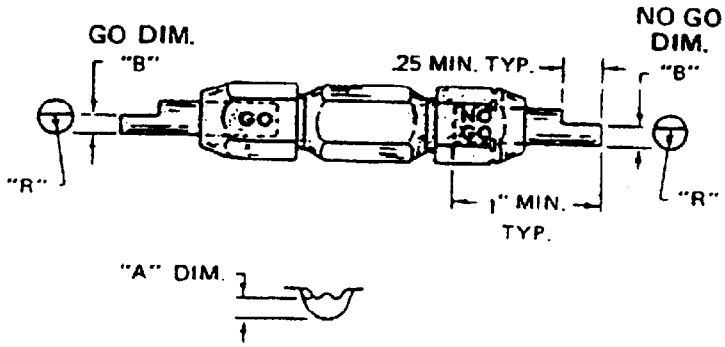

Tool no.	Crimp size	Barrel crimp dimensions A**		Radius R
		GO	NO GO	
69324	22-16 16-14 12-10	.063 (1.60) .074 (1.88) .104 (2.64)	.069 (1.75) .080 (2.03) .110 (2.79)	.067 (1.70) .0805 (2.045) .109 (2.77)

Metric equivalents are in parentheses.
** Plug gauge dimensions apply when tool is bottomed but not under pressure.

Configuration G

* Trademark of AMP Inc.

FIGURE 29. Instructions for AMP 69324 crimp tool - Continued.

Maintenance - Continued:

5. Procedure for measuring the tool die closure:

   a. Remove traces of oil from tool crimping area and plug gauge.
   b. Close handles of tool until crimping jaws are bottomed. Do not apply additional pressure to tool handles.
   c. Measure tool wire barrel crimping dies using the plug gauge dimensions given on configuration G. Hold gauge in straight alignment with the tool and carefully try to insert, without forcing, the GO element and then the NO GO element (see configuration H). The GO element must pass completely through the length of the crimping surface.
   d. The NO GO element may enter partially, but must not pass completely through the length of the crimping surface.
   e. If the wire barrel dies meet the GO-NO GO gauge conditions, the tool may be considered dimensionally correct. If the tool crimping dies do not conform to the GO-NO GO gauge conditions, contact the AMP field representative.

INSPECTION OF WIRE BARREL CRIMPING DIES WITH PLUG GAUGE

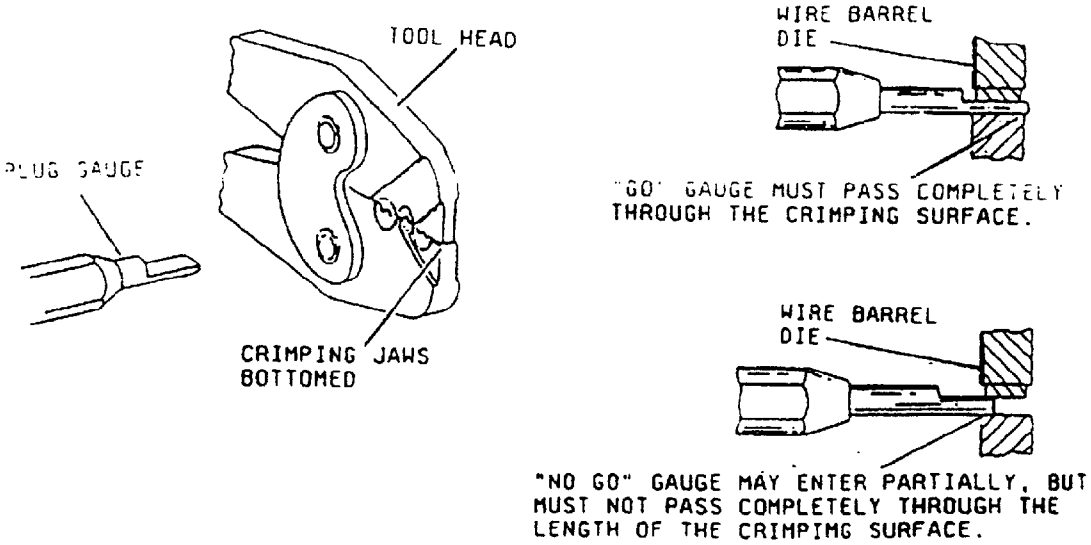

Configuration H

6. Certi-crimp rachet feature - The certi-crimp rachet feature should be checked to make certain that the rachet does not release prematurely allowing the dies to open before they have fully bottomed. To check the rachet feature:

   a. Make a test crimp using the maximum wire load, i.e., AWG no. 16 stranded wire in a 22-16 terminal. When this crimp is made, squeeze the handles until the rachet is free, however, do not relax pressure on the tool handles.
   b. If a .001 (0.03 mm) or smaller shim can be inserted between the bottoming surfaces of the dies, the certi-crimp rachet is satisfactory.
   c. If the clearance between bottoming surfaces of the dies is greater than .001 (0.03 mm), the dies are considered as not bottoming. Contact the AMP field representative.

FIGURE 29. Instructions for AMP 69324 crimp tool - Continued.

Introduction: The AMP 59461 and 59294 crimp tools (see configuration A) are used to crimping AMP high temperature and heat resistant Strato-therm terminals and splices on AWG no. 16 through AWG no. 10 only.

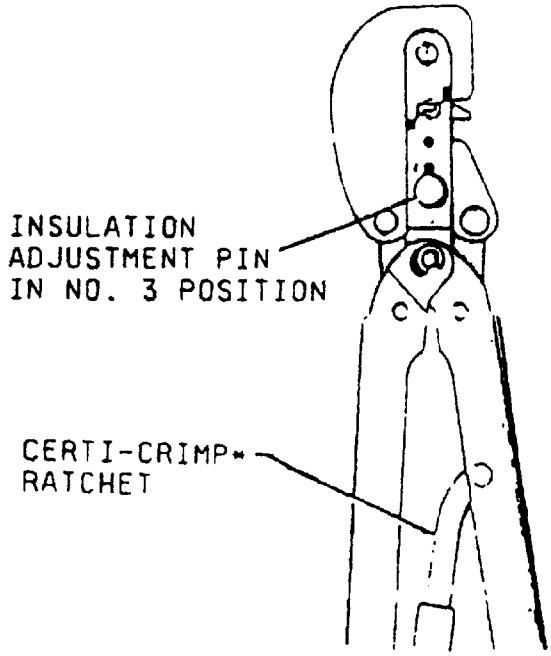

Configuration A

Wire stripping and crimping procedures:

1. Strip wire to dimensions shown on configuration B.
2. To open crimping jaws, close handles until Certi-crimp* rachet releases (see configuration A). Note that once rachet is engaged, handles cannot be opened until they are fully closed.
3. Place terminal or splice in crimping jaws as shown on configurations C or D.
4. Close handles until terminal or splice is held firmly in place. Do not deform terminal or splice barrel.
5. Insert stripped wire into terminal or splice barrel.
6. To complete crimp, close handles until Certi-crimp* rachet releases. Handles will open automatically and crimped item may be removed.
7. To crimp other half of splice, remove it and reposition uncrimped half in tool and follow same procedure used to crimp first half of splice. If splice cannot be turned, turn tool around.
8. Crimped terminals and splices should appear as shown on configuration B.

Color and hashmark code:

1. High temperature terminals and splices are color coded orange (see configuration B).
2. Heat resistant terminals and splices are not color coded.
3. A hashmark code will appear on the bottom of terminals and splices for wire size no. 16-14, when correctly crimped (see configuration B).

* Trademark of AMP Inc.

FIGURE 30. Instructions for AMP 59461 and 59294 crimp tools.

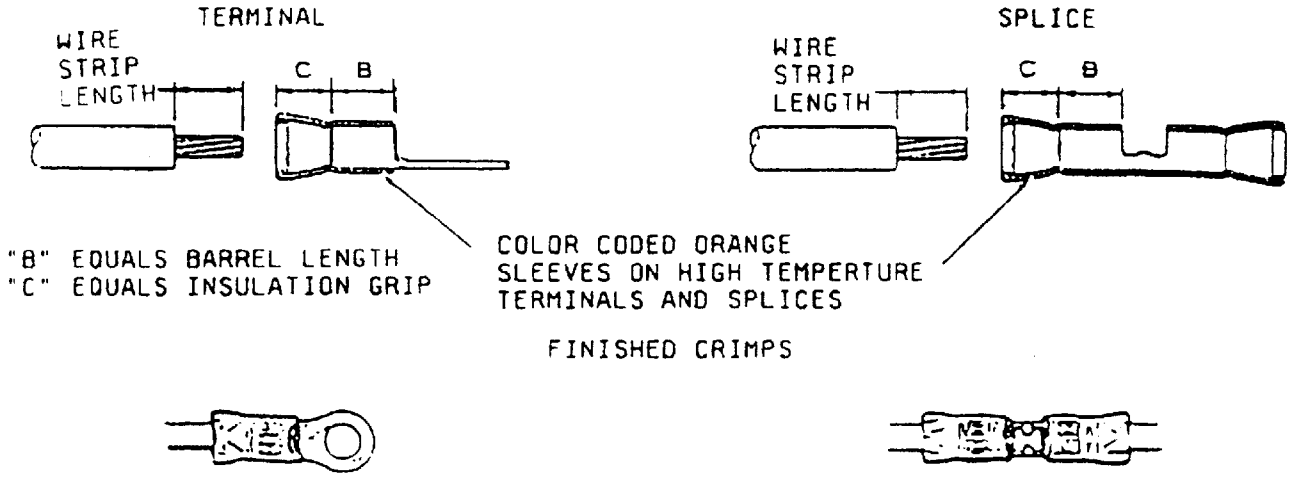

Tool no.	Wire size	Hashmark code	Wire stripping length			
			Terminals		Splices	
			Min	Max	Min	Max
59461	16-14	2 hashmarks	.171 (4.34)	.203 (5.16)	.250 (6.35)	.281 (7.14)
59294	12-10	—	.250 (6.35)	.281 (7.14)	.343 (8.71)	.375 (9.53)

Metric equivalents are in parentheses.

Configuration B

Insulation crimping adjustment:

1. The insulation crimping section of the hand tool has three positions: 1 - tight, 2 - medium, and 3 - loose.
2. Insert insulation adjustment pin in no. 3 position (see configuration A).
3. Place terminal or splice in crimping jaws as shown on configuration C or D.
4. Insert unstripped into only the insulation grip portion of the terminal or the splice (see configuration B).
5. Make a test crimp and check insulation support by bending the wire back and forth once. Terminal or splice sleeve should retain grip on wire insulation. If wire pulls out, set insulation adjustment pin in next tighter position (no. 2).
6. Make a test crimp and repeat adjustment as necessary until desired insulation grip is obtained. Do not use a tighter setting than required.

FIGURE 30. Instructions for AMP 59461 and 59294 crimp tools - Continued.

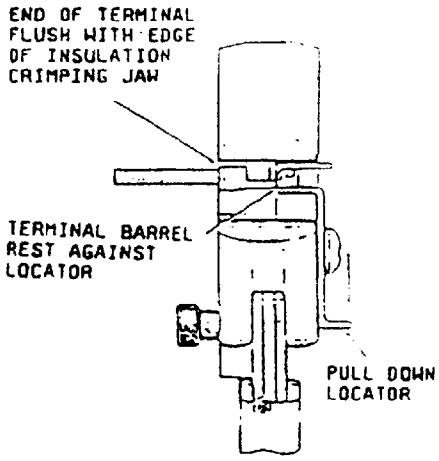

Configuration C

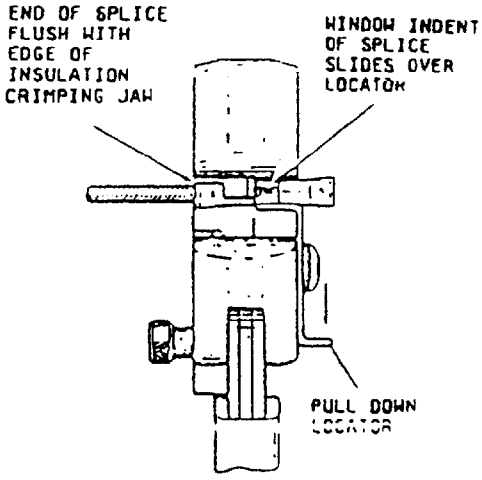

Configuration D

Maintenance:

1. Lubrication - Keep all pins, pivot points, and bearing surfaces lubricated with a good grade SAE no. 20 motor oil.
2. Die closure inspection - It is recommended that the tool die closure be measured periodically and the Certi-crimp® rachet feature be checked once a month. This will ensure that the tool will continue to provide uniform terminations.
3. Tool die closure measurement - This measurement is accomplished using a "GO-NO GO" plug gauge. A suggested design is shown on configuration E. The "GO-NO GO" dimensions for both the wire barrel and the insulation crimping dies are also listed on configuration E.
4. Procedure for measuring the tool die closure:

   a. Select the hand tool and gauge having the respective gauge dimensions for that hand tool from the list on configuration E.
   b. Remove traces of oil or dirt from tool crimping area and plug gauge.
   c. Close handles of tool until crimping jaws are bottomed. Do not apply additional pressure to tool handles.
   d. Pull down the spring-loaded locator for access to wire barrel crimping die area (see configuration C).
   e. Measure the closure of the wire barrel crimping area of the tool using the proper plug gauge. Hold gauge in straight alignment with the tool and carefully try to insert, without forcing, the GO element and then the NO GO element (see configuration F, detail A). The GO element must pass completely through the length of the crimping surface.
   f. The NO GO element may enter partially, but must not pass completely through the length of the crimping surface.
   g. Insert tool insulation adjustment pin in the no.1 position.
   h. Measure the insulation crimping die area of the tool with the proper gauge in the same manner as steps e and f (see configuration F, detail B).
   i. If both the wire barrel and insulation dies meet the GO-NO GO gauge conditions, the tool may be considered dimensionally correct. If the tool crimping dies do not conform to the GO-NO GO gauge conditions, contact the AMP field representative.

FIGURE 30. Instructions for AMP 59461 and 59294 crimp tools - Continued.

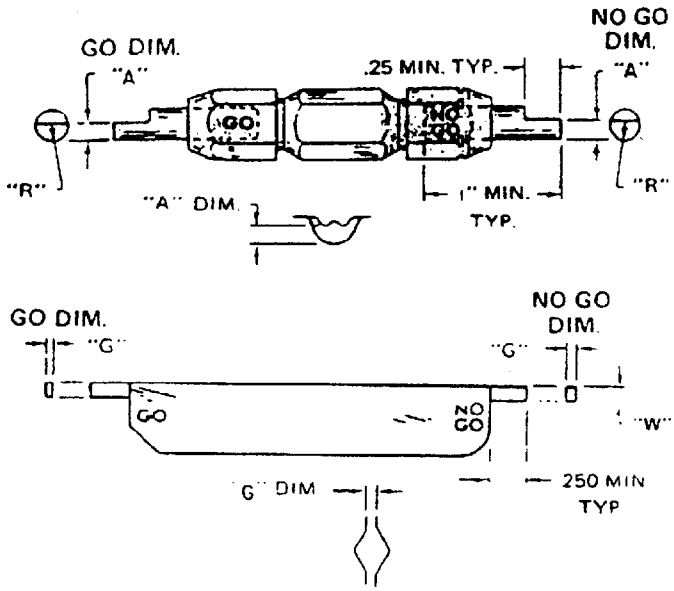

Tool no.	Barrel crimp dimensions A*		Radius R	Insulation crimp dimensions G* (set insulation adjustment pins at no. 1 position)		Width W max
	GO	NO GO		GO	NO GO	
59294	.067 (1.70)	.073 (1.85)	.062 (1.57)	.040 (1.02)	.060 (1.52)	.187 (4.75)
59461	.091 (2.31)	.097 (2.46)	.109 (2.77)	.052 (1.32)	.072 (1.83)	.140 (3.56)

Metric equivalents are in parentheses.
* Plug gauge dimensions apply when tool is bottomed but not under pressure.

Configuration E

5. Certi-crimp rachet feature - The certi-crimp rachet feature should be checked to make certain that the rachet does not release prematurely allowing the dies to open before they have fully bottomed. To check the rachet feature:

   a. Make a test crimp using the maximum wire load, i.e., AWG no. 16 wire in a 22-16 terminal. When this crimp is made, squeeze the handles until the rachet is free, however, do not relax pressure on the tool handles.
   b. If a .001 (0.03 mm) or smaller shim can be inserted between the bottoming surfaces of the dies, the certi-crimp rachet is satisfactory.
   c. If the clearance between bottoming surfaces of the dies is greater than .001 (0.03 mm), the dies are considered as not bottoming. Contact the AMP field representative.

FIGURE 30. Instructions for AMP 59461 and 59294 crimp tools - Continued.

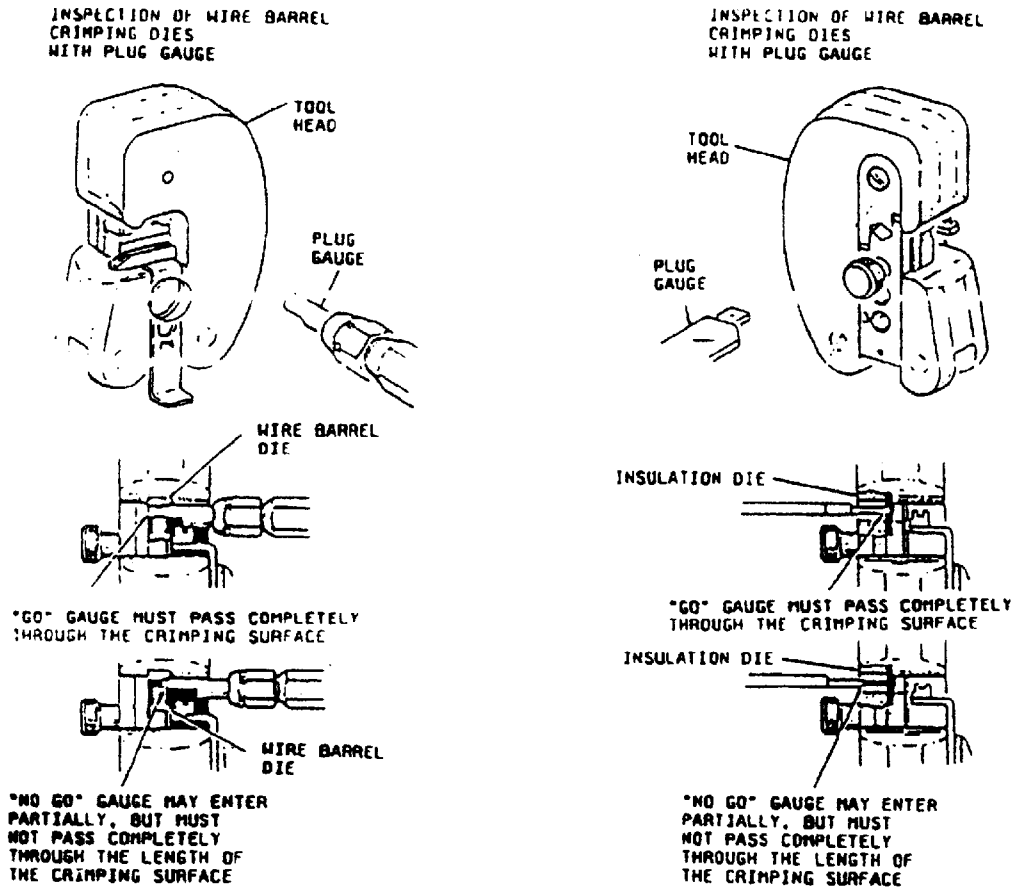

Detail A **Detail B**

Configuration F

FIGURE 30. Instructions for AMP 59461 and 59294 crimp tools - Continued.

Introduction: The AMP 59500 crimp tool (see configuration A) accepts dies used to crimp uninsulated, preinsulated, and heat resistant termashield* ferrules on single and multiple conductor shielded wires. Tools are coated with preservative. Wipe this preservative from the tool, particularly from the crimping area before use.

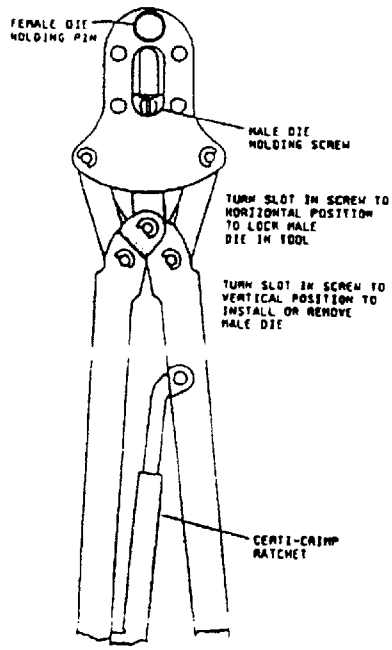

Configuration A

Die insertion procedure:

1. Open tool handles by closing handles until the Certi-crimp* rachet releases (see configuration A). Once rachet is engaged, handles cannot be opened until they are fully closed.
2. Each set of dies consists of a male die and a female die (see configuration B).
3. Pull female die holding pin out of tool and close handles until male die holding screw is visible (see configuration A).
4. Turn male die holding screw slot in a vertical position as shown on configuration B.
5. Insert male die into the head of the tool with the color coded groove facing the operator. Do not attempt to insert dies into the tool while holding dies together. Dies are inserted into tool separately
6. Insert female die into the head of the tool. Both color coded grooves should now be facing the operator.
7. Turn male die holding screw slot to horizontal position as shown on configuration C.
8. Open handles slightly and push female die down so that the hole in the female die lines up with the hole in the tool. Insert the female die holding pin (see configuration C).

* Trademark of AMP Inc.

FIGURE 31. Instructions for AMP 59500 crimp tool.

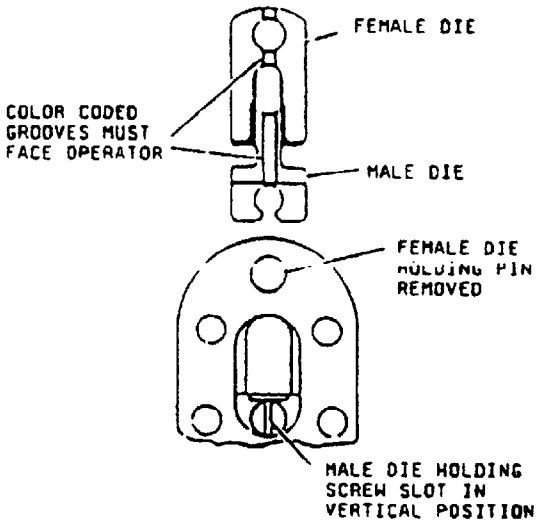

Configuration B

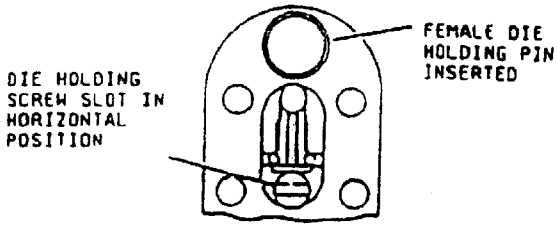

Configuration C

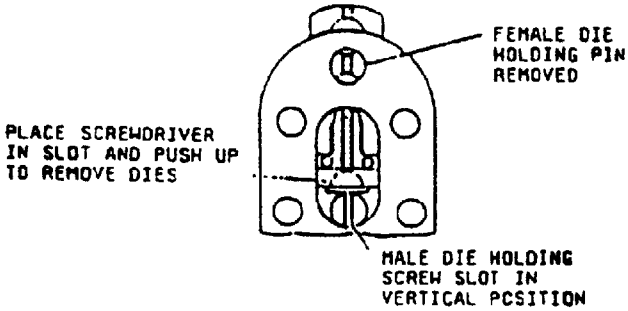

Configuration D

Die removal procedure:

1. Remove female die holding pin.
2. Close handles until the male die holding screw is visible (see configuration D).
3. Turn male die holding screw slot in a vertical position as shown on configuration D.
4. Push die set up with a small screwdriver or drill pin just enough to permit female die to be pulled out of the tool.
5. Remove male die and insert the die holding pin back into the tool

FIGURE 31. Instructions for AMP 59500 crimp tool - Continued.

Maintenance:

1. Visual inspection - It is recommended that the tool be inspected once a month. Visually inspect the tool for missing pins or retaining rings. Operate the tool and note the return action of the spring-loaded handles. Replace missing or defective parts. This will ensure that the tool will continue to provide uniform terminations.
2. Cleaning - Immerse the tool in degreasing compound (handles partially closed) to remove dirt and foreign matter. Remove remaining degreasing compound with a lint free cloth. Tool may be wiped clean with a lint free cloth if degreasing compounds are not available. Relubricate tool in accordance with instructions below.
3. Lubrication - Keep all pins, pivot points, and bearing surfaces lubricated with a good grade SAE no. 20 motor oil. Wipe excess oil from the tool, particularly from the crimping area. Oil transferred from the crimping area onto certain terminations may affect the electrical characteristics of an application.
5. Certi-crimp rachet feature - The certi-crimp rachet feature should be checked to make certain that the rachet does not release prematurely allowing the dies to open before they have fully bottomed. To check the rachet feature:

   a. Install die set in tool.
   b. Thoroughly clean the bottoming surfaces of the dies.
   c. Make a test crimp using the maximum wire load, i.e., using a ferrule with maximum loading of shielded wire and ground wire as outlined in the instructions packaged with the dies. When this crimp is made, squeeze the handles until the rachet is free, however, do not relax pressure on the tool handles.
   d. Bottoming is satisfactory if bottoming surfaces of dies make contact with each other or if the clearance between the bottoming surfaces is .001 (0.03 mm) or less.
   e. If the .001 (0.03 mm) shim stock can be inserted completely between the bottoming surfaces of the dies, than the dies are considered as not bottoming. Contact the AMP field representative.

FIGURE 31. Instructions for AMP 59500 crimp tool - Continued.

Introduction: The AMP strato-therm crimp tools (see configuration A) are used to crimp high temperature and heat resistant strato-therm terminals and splices on wire sizes no. 22 through 14 AWG. These instructions cover AMP 46673, 46673-1, and 46988 crimp tools.

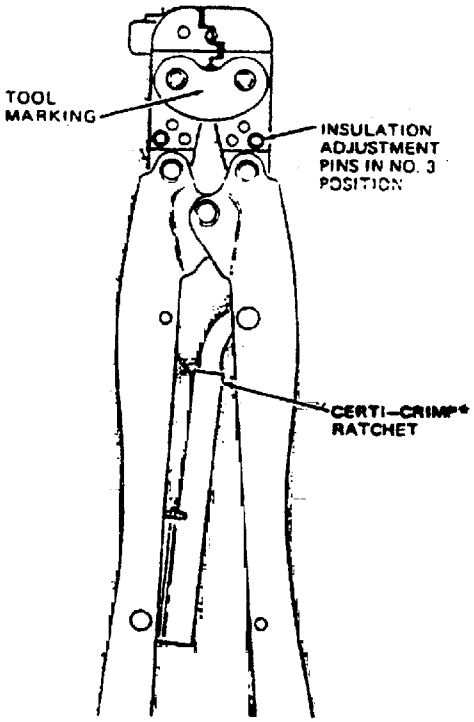

Configuration A

* Trademark of AMP Inc.

FIGURE 32. Instructions for AMP strato-therm crimp tools.

Wire stripping and crimping procedures:

1. Strip wire to dimensions shown on configuration B.
2. To open crimping jaws, close handles until Certi-crimp* rachet releases (see configuration A). Note that once rachet is engaged, handles cannot be opened until they are fully closed.
3. Place terminal or splice in crimping jaws as shown on configurations C, or D.
4. Close handles until terminal or splice is held firmly in place. Do not deform terminal or splice barrel.
5. Insert stripped wire into terminal or splice barrel.
6. To complete crimp, close handles until Certi-crimp* rachet releases. Handles will open automatically and crimped item may be removed.
7. To crimp other half of splice, remove it and reposition uncrimped half in the tool (see configuration D) and follow same procedure used to crimp first half of splice. If splice cannot be turned, turn tool around.
8. Crimped terminal and splices should appear as shown on configuration B.

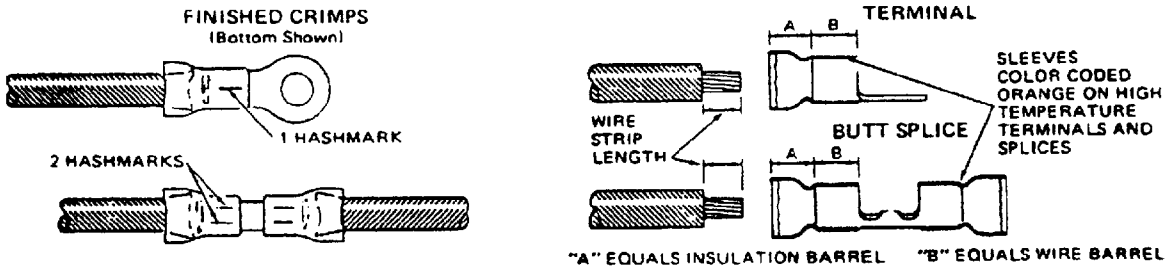

Tool no.	Wire size	Hashmark code	Wire stripping length			
			Terminals		Splices	
			Min	Max	Min	Max
46673 &	22-16	1 hashmark	.171 (4.34)	.203 (5.16)	.250 (6.35)	.281 (7.14)
46673-1** &	22-16	1 hashmark				
46988 &	16-14	2 hashmarks				

Metric equivalents are in parentheses.
** For wires with thin wall insulation.

Configuration B

* Trademark of AMP Inc.

FIGURE 32. Instructions for AMP strato-therm crimp tools - Continued.

Insulation crimping adjustment:

1. The insulation crimping section of the hand tool has three positions: 1 - tight, 2 - medium, and 3 - loose.
2. Insert insulation adjustment pins in no. 3 position (see configuration A).
3. Place terminal or splice in crimping jaws as shown on configuration C or D.
4. Insert unstripped wire into only the insulation grip portion of the terminal or the splice (see configuration B).
5. Make a test crimp and check insulation support by bending the wire back and forth once. Terminal or splice should retain grip on wire insulation. If wire pulls out, set insulation adjustment pin in next tighter position (no. 2).
6. Make a test crimp and repeat adjustment as necessary until desired insulation grip is obtained. Do not use a tighter setting than required.
7. Always make certain that insulation adjustment pins are in the same position.

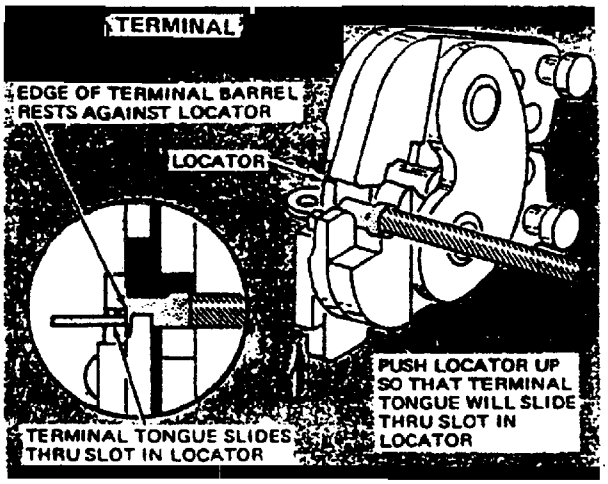

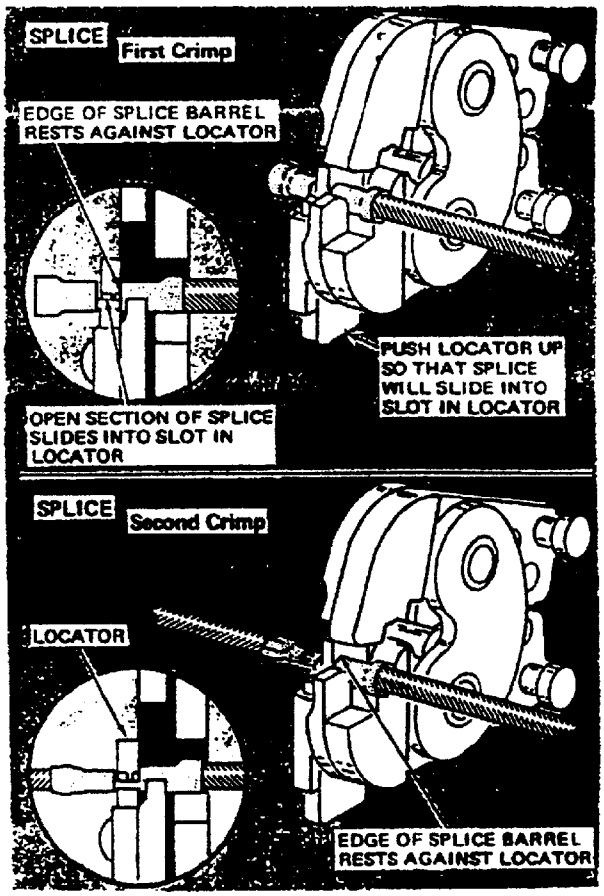

Configuration C

Configuration D

FIGURE 32. Instructions for AMP strato-therm crimp tools - Continued.

Color and hashmark code:

1. The insulation sleeves of the high temperature terminals and splices are color coded orange (see configuration B).
2. Heat resistant terminals and splices are not color coded.
3. A hashmark code will appear on the bottom of terminals and splices when correctly crimped (see configuration B).

Maintenance:

1. Visual inspection - It is recommended that the tool be inspected once a month. Visually inspect the tool for missing pins or retaining rings. Operate the tool and note the return action of the spring-loaded handles. Replace missing or defective parts. This will ensure that the tool will continue to provide uniform terminations.
2. Visual inspection of die crimp contour - Inspect the tool die crimping areas for worn, broken, or chipped conditions. Although dies may gauge within permissible limits, worn or broken crimping die areas are objectionable and can affect the quality of the crimp. Examples of possible damaged areas of the crimping dies are shown on configuration E.
3. Cleaning - Immerse the tool in degreasing compound (handles partially closed) to remove dirt and foreign matter. Remove remaining degreasing compound with a lint free cloth. Tool may be wiped clean with a lint free cloth if degreasing compounds are not available. Relubricate tool in accordance with instructions below.
4. Lubrication - Keep all pins, pivot points, and bearing surfaces lubricated with a good grade SAE no. 20 motor oil. Wipe excess oil from the tool, particularly from the crimping area. Oil transferred from the crimping area onto certain terminations may affect the electrical characteristics of an application.
5. Tool die closure measurement - This measurement is accomplished using "GO-NO GO" plug gauges. Suggested designs are shown on configurations F and G. The "GO-NO GO" dimensions of the plug gauges for the plug gauge members are also listed on configurations F and G.
6. Procedure for measuring the tool die closure:
   a. Remove traces of oil from die closure area and plug gauge members.
   b. Remove locator assembly. Do not lose spring in locator assembly.
   c. Close handles of tool until crimping jaws are bottomed. Do not apply additional pressure to tool handles.
   d. With crimping jaws bottomed, check wire barrel crimp die closure using the proper plug gauge. Hold gauge in straight alignment with the die closure and carefully try to insert, without forcing, the GO element and then the NO GO element. See configuration H, dtail A. The GO element must pass completely through the length of the crimping surface.
   e. The NO GO element may enter partially, but must not pass completely through the barrel crimp die closure.
   f. Reinstall locator assembly.
   g. Insert tool insulation adjustment pins in the no. 1 position.
   h. With crimping jaws bottomed, check the insulation crimp die closure using the proper plug gauge in the same manner as steps d and e. See configuration H, detail B.
   i. If both wire barrel and insulation dies meet the GO-NO GO gauge conditions, the die closures may be considered dimensionally correct. If the die closures do not conform to the GO-NO GO gauge conditions, contact the AMP field representative.
7. Certi-crimp rachet feature - The certi-crimp rachet feature should be checked to make certain that the rachet does not release prematurely allowing the dies to open before they have fully bottomed. To check the rachet feature:

   a. Make a test crimp using the maximum wire load, i.e., AWG no. 14 wire in a 16-14 terminal. When this crimp is made, squeeze the handles until the rachet is free, however, do not relax pressure on the tool handles.
   b. If a .001 (0.03 mm) or smaller shim can be inserted between the bottoming surfaces of the jaws, or if there is no opening whatever, the certi-crimp rachet is satisfactory.
   c. If the clearance between bottoming surfaces of the jaws is greater than .001 (0.03 mm), the jaws are considered as not bottoming. Contact the AMP field representative.

8. See configuration I for replacement parts chart.

FIGURE 32. Instructions for AMP strato-therm crimp tools - Continued.

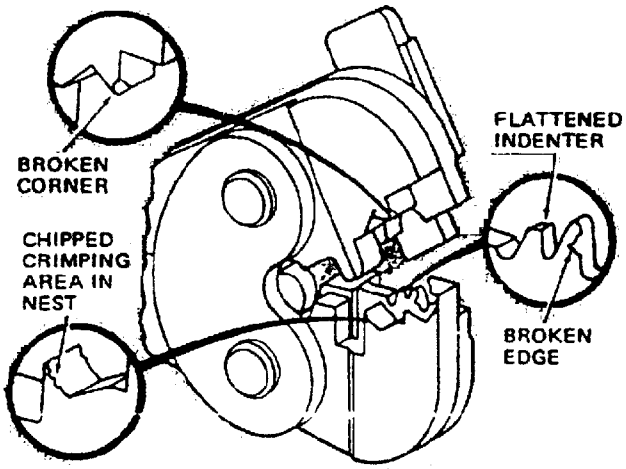

Configuration E

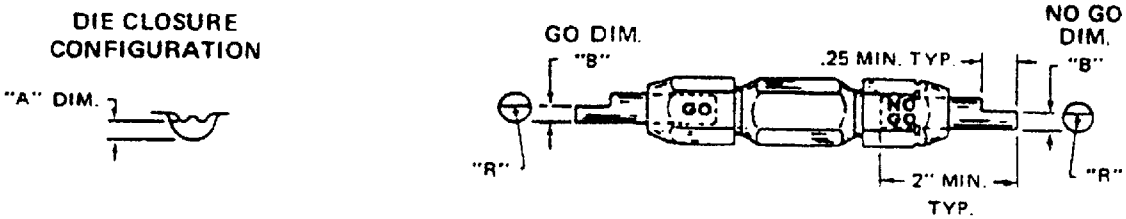

Tool no.	Die closure dimensions A*		Gauge member dimension B		Radius R
	GO	NO GO	GO	NO GO	
46673	.0590 (1.499)	.0650 (1.651)	.0590 (1.499) / .0593 (1.506)	.0649 (1.648) / .0650 (1.651)	.062 (1.57)
46673-1	.0590 (1.499)	.0650 (1.651)	.0590 (1.499) / .0593 (1.506)	.0649 (1.648) / .0650 (1.651)	.062 (1.57)
46988	.0670 (1.702)	.0730 (1.854)	.0670 (1.702) / .0673 (1.709)	.0729 (1.852) / .0730 (1.854)	.062 (1.57)

Metric quivalents are in parentheses.
* Plug gauge dimensions apply when tool is bottomed but not under pressure.

Configuration F

FIGURE 32. Instructions for AMP strato-therm crimp tools - Continued.

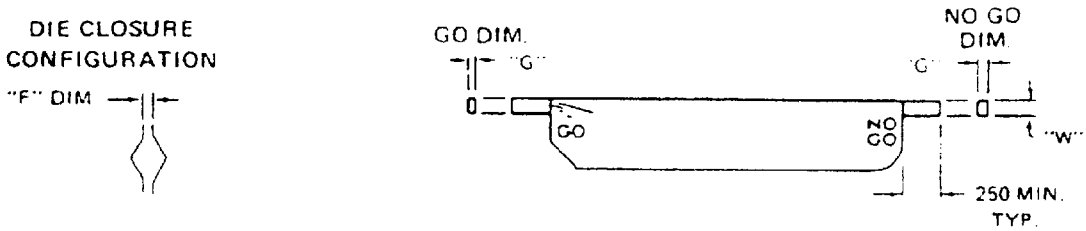

Tool no.	Die closure dimension F* (set adjustment pins at no. 1)		Gauge member** dimension B		Width W (max)
	GO	NO GO	GO	NO GO	
46673	.0300 (0.762)	.0500 (1.270)	.0300 (0.762) / .0303 (0.770)	.0499 (1.267) / .0500 (1.270)	.120 (3.05)
46673-1	.0300 (0.762)	.0500 (1.270)	.0300 (0.762) / .0303 (0.770)	.0499 (1.267) / .0500 (1.270)	.120 (3.05)
46988	.0400 (1.016)	.0600 (1.524)	.0400 (1.016) / .0403 (1.024)	.0599 (1.521) / .0600 (1.524)	.120 (3.05)

Metric equivalents are in parentheses.
* Plug gauge dimensions apply when tool is bottomed but not under pressure.
** Material - tool steel.

Configuration G

FIGURE 32. Instructions for AMP strato-therm crimp tools - Continued.

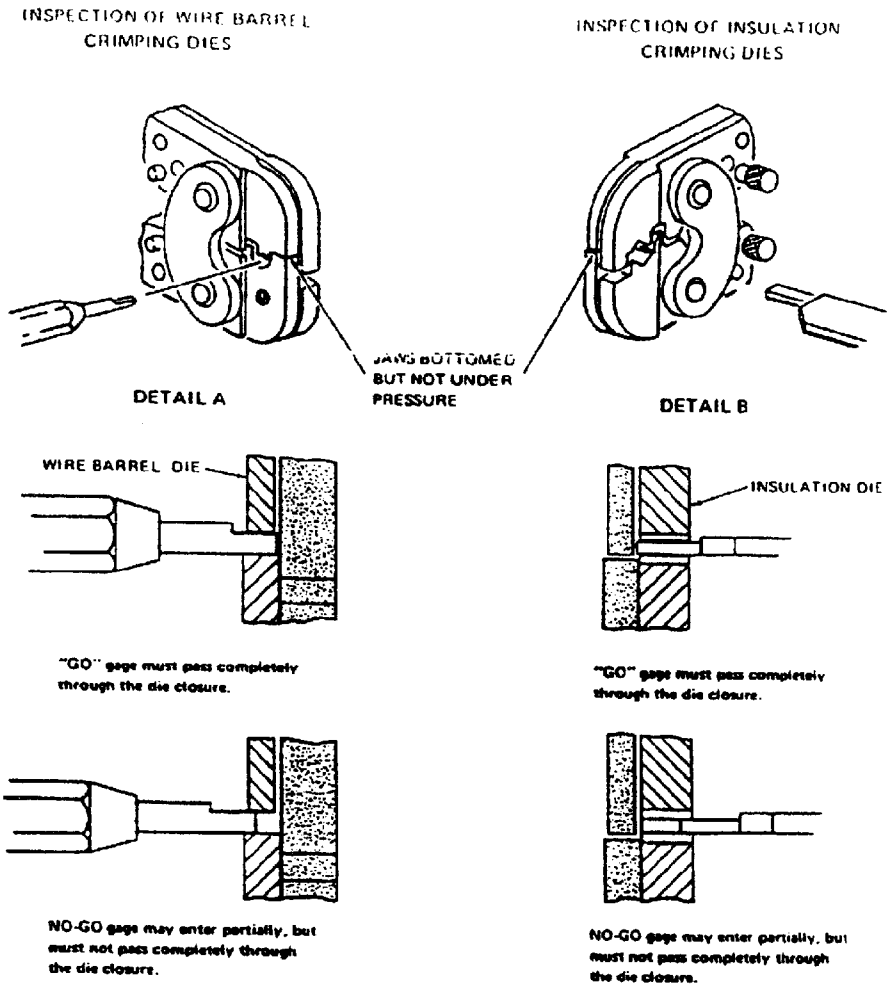

Configuration H

FIGURE 32. Instructions for AMP strato-therm crimp tools - Continued.

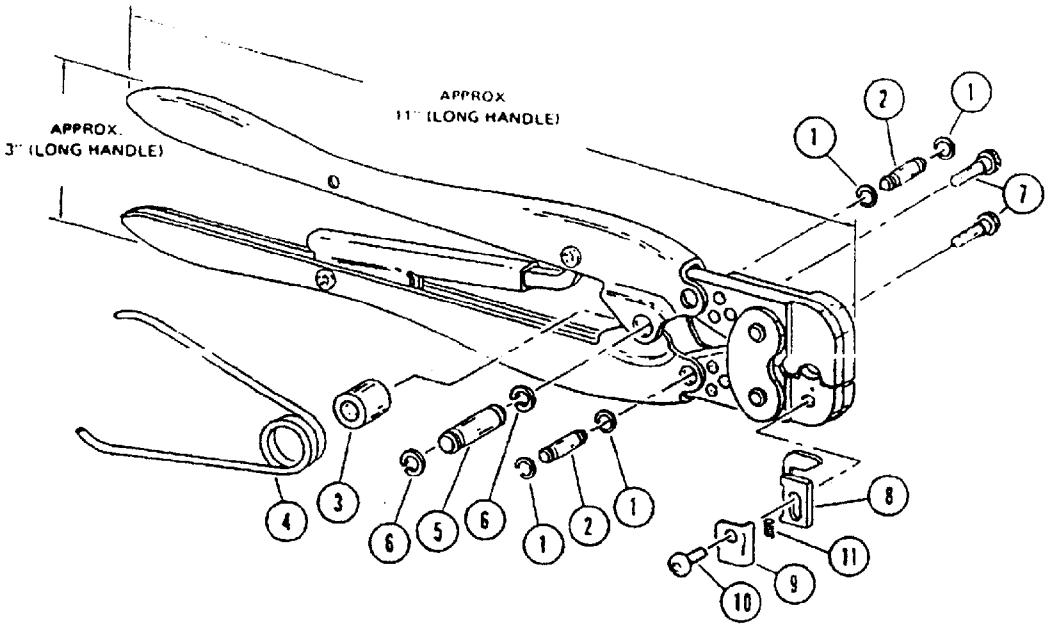

Item	DESCRIPTION	Tool numbers		
		46673	46673-1	46988
1	Ring, retaining	21045-3	21045-3	21045-3
2	Pin, retaining	300432	300432	300432
3	Collar, OBSELETE	39366	39366	39366
4	Spring	39364	39364	39364
5	Pin, retaining	300499	300499	300499
6	Ring, retaining	21045-6	21045-6	21045-6
7	Pin, adjustment	39207	39207	39207
8	Locator	305363	305363	305363
9	Housing, locator	302994	302994	302994
10	Screw	9-305927-1	9-305927-1	9-305927-1
11	Spring	301201	301201	301201

Configuration I

FIGURE 32. Instructions for AMP strato-therm crimp tools - Continued.

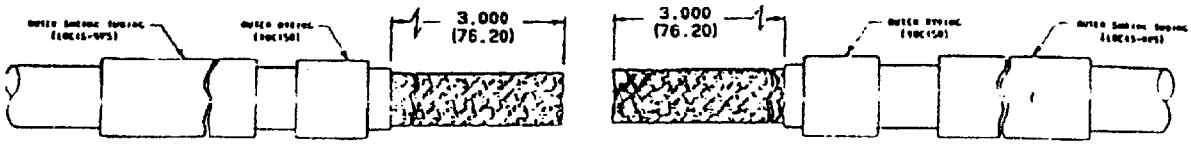

1. Slide outer shrink tubing (blue) and outer hyring onto cable. Strip outer jacket to the dimensions shown.

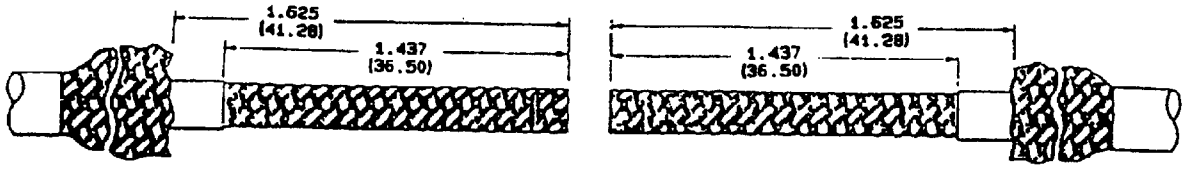

2. Pull outer braid back (accordion fashion) to dimensions shown. Strip outer dielectric to the dimensions shown.

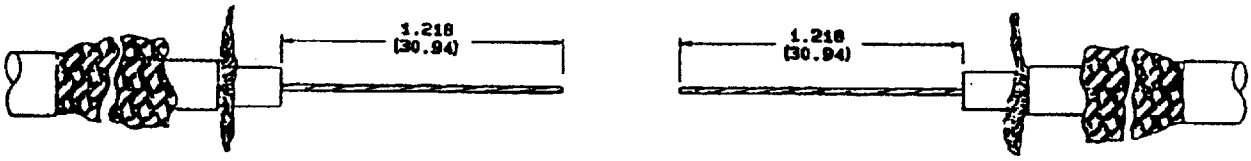

3. Comb inner braid and flare it away to expose inner dielectric. Strip inner dielectric to the dimensions shown

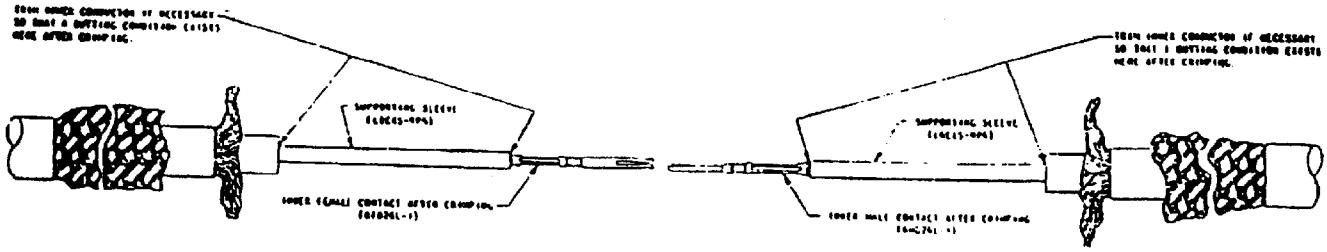

4. Slide supporting sleeve over inner conductor until it stop against the inner dielectric. Assembly the inner to the inner conductor. Inner contact must butt against the supporting sleeve. Crimp with recommended tooling.

FIGURE 33. Assembly procedure for #8 Burndy twinaxial/triaxial contacts.

5a. Slide the inner shrink tubing (clear) onto the supporting sleeve Apply heat until shrink tubing shrinks snugly around the supporting sleeve. Note: Heat should be first applied at the cable dielectric and moved toward the contact

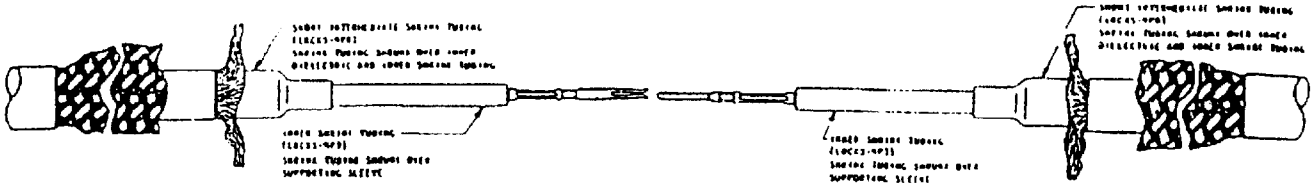

5b. Slide the short intermediate shrink tubing (white) onto the inner dielectric and inner shrink tubing. Apply heat until shrink tubing shrinks snugly around equal parts of the inner dielectric and inner shrink tubing.

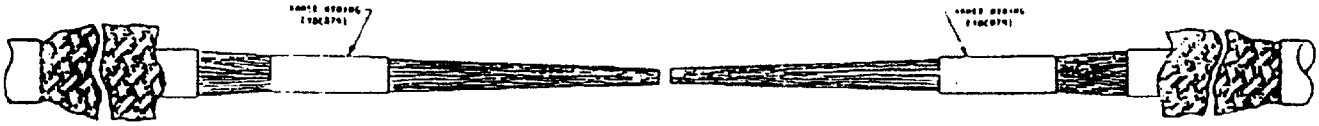

6. Comb inner braid forward. Slide inner hyring over braid until it stops against the inner dielectric and braid.

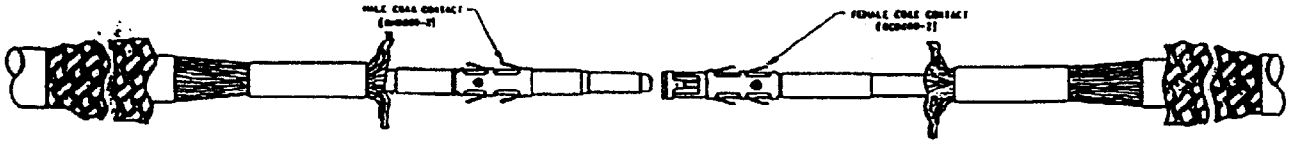

7. Flare the inner braid. Assemble the inner contact into the sub-miniature coaxial contact until it snap locks into place.

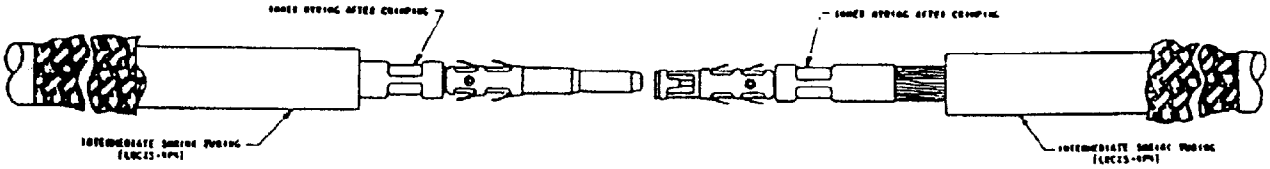

8. Slide inner hyring and braid forward until the inner hyring stops against the contact spring. Crimp hyring with the recommended tooling and trim away the excess braid. Slide the intermediate shrink tubing (red) over the subminiature coaxial contact and onto the inner braid.

FIGURE 33. Assembly procedure for #8 Burndy twinaxial/triaxial contacts - Continued.

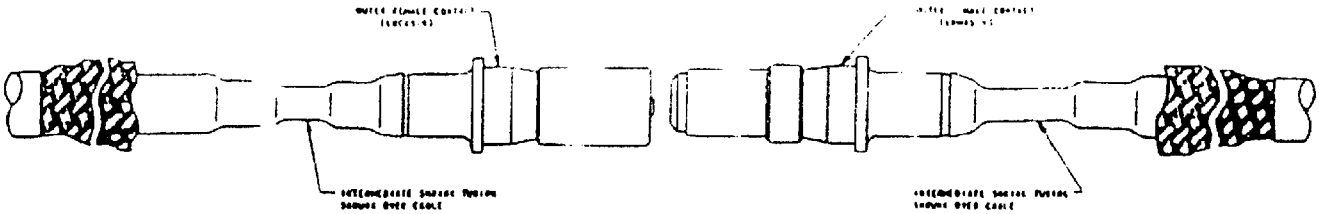

9. Assemble the subminiature contact into the outer contact until it snap locks into place. Slide intermediate shrink tubing forward until it comes to rest on the chamfer at the rear of the outer contact. Apply heat until shrink tubing shrinks snugly around cable while one end must remain on chamfer of the outer contact.

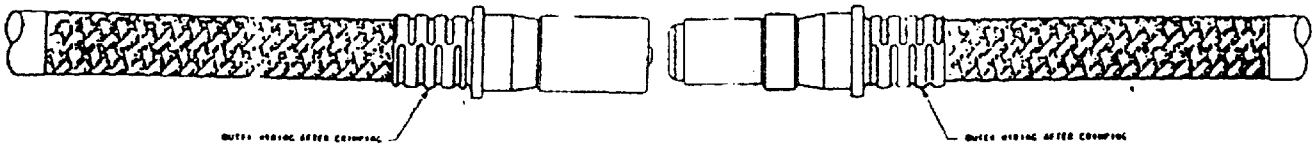

10. Pull braid forward tightly, then slide outer hyring forward until it stops against the outer shoulder of the outer contact. Pull outer contact forward so that the louvers of the subminiature are seated on the insulation bushing of the outer body. Crimp outer hyring with recommended tooling and trim away excess braid.

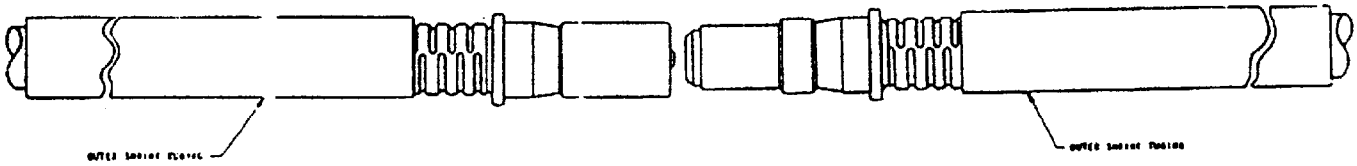

11. Slide the outer shrink tubing forward until it stops against outer hyring.

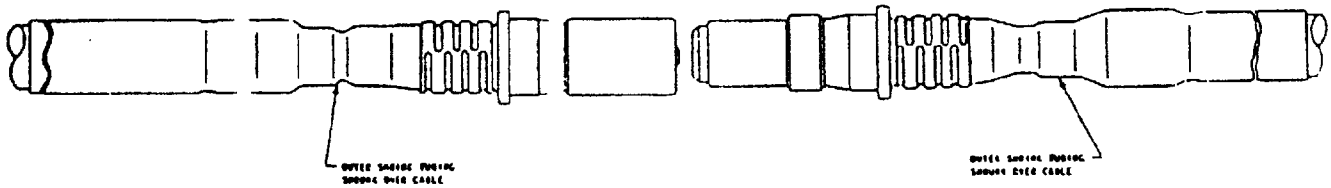

12. Apply heat until shrink tubing shrinks snugly around the cable while the end is still butted against the outer hyring.

Section of completed assemblies showing relationship of components.

FIGURE 33. Assembly procedure for #8 Burndy twinaxial/triaxial contacts - Continued.

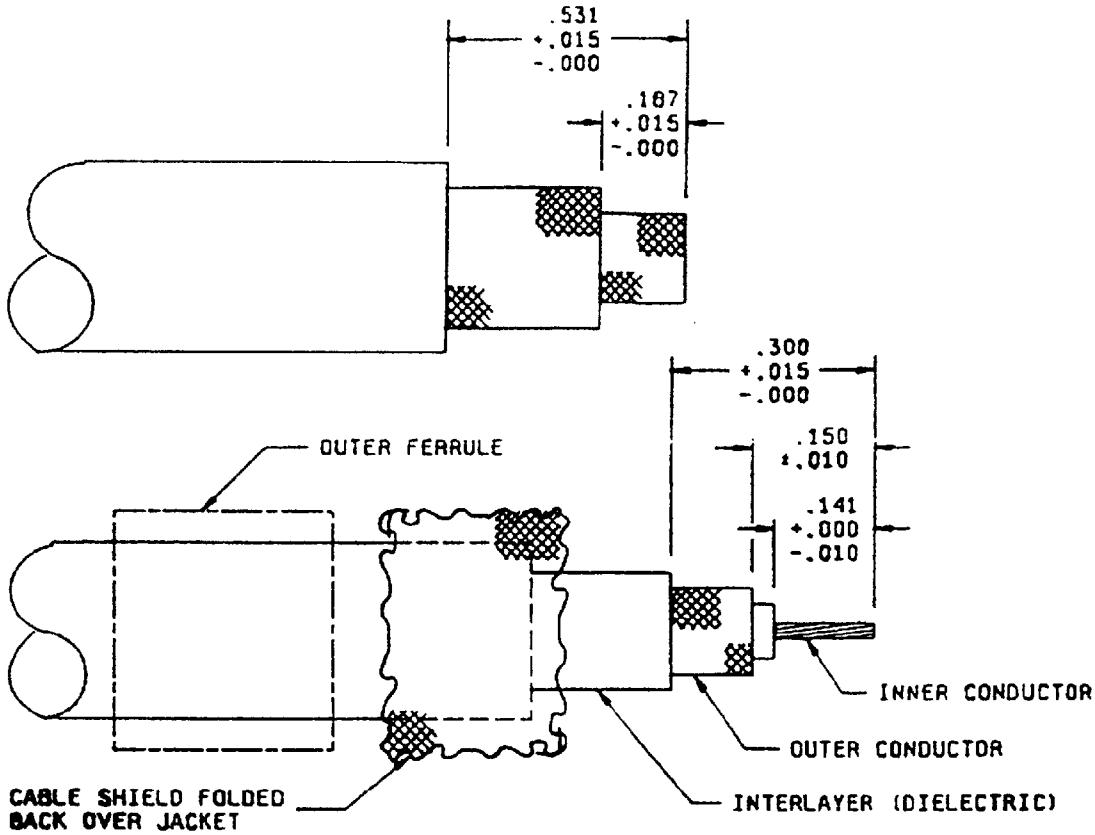

Inches	mm
.000	0.00
.010	0.25
.015	0.38
.141	3.58
.150	3.81
.187	4.75
.300	7.62
.531	13.49

Stripping instructions;

1. Strip cable as shown. Slide outer ferrule well up over outer jacket prior to folding back cable shield.
2. Slide teflon washer over inner conductor of cable, flush with the inner dielectric. Then crimp inner contact to center conductor of the cable.
3. Slide inner ferrule over outer conductor and "interlayer".
4. Flare outer conductor slightly and insert inner contact into inner body to a firm butt. The outer conductor must go outside back end of the inner body. Slide inner ferrule forward over braid and butt shoulder of the inner body. Crimp the ferrule.
5. Assemble the inner body into the outer body to a firm butt. Fold the cable shield forward over body. Slide outer ferule forward over braid and butt shoulder of body. Crimp the ferrule.
6. Package with a tag in bag marked as follows: 902-5020-1 74868 date code.

FIGURE 34. Stripping instructions for Amphenol triaxial cable.

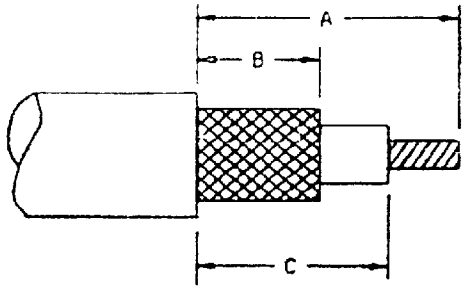

Basic stripping information:

1. Strip cable jacket (dimension A), braid (dimension B), and dielectric (dimension C) as indicated. All cuts are to be sharp and square. It is important not to nick braid, dielectric, or center conductor.

   a. If the inner contact is to be crimped, do not tin the center conductor.
   b. If the inner contact is to be soldered, tin the center conductor avoiding excessive heat.

2. Slide the outer ferrule over the cable. Slightly flare the cable braid (do not comb out braid).
3. Place contact on cable center conductor so it bottoms in contact wire barrel. Center conductor should be visible through the inspection hole in contact.

MIL-C-39012 PIN	Series	Jacket dimension A	Braid dimension B	Dielectric dimension C
M39012/1-( ) M39012/2-( ) M39012/3-( ) M39012/5-( )	M	.687 (17.45)	.416 (10.57) .396 (10.06)	.510 (12.95) .490 (12.45)
M39012/6-( ) M39012/7-( ) M39012/8-( ) M39012/10-( ) M39012/11-( )	C	.697 (17.70) .677 (17.20)	.416 (10.57) .396 (10.06)	.510 (12.95) .490 (12.45)
M39012/16-( ) M39012/17-( ) M39012/19-( ) M39012/20-( )	BNC	.593 (15.06)	.353 (8.97) .333 (8.46)	.447 (11.35) .427 (10.85)
M39012/26-( ) M39012/27-( ) M39012/28-( ) M39012/29-( ) M39012/30-( )	TNC	.593 (15.06)	.353 (8.97) .333 (8.46)	.447 (11.35) .427 (10.85)
M39012/35-( ) M39012/36-( ) M39012/37-( ) M39012/38-( ) M39012/39-( ) M39012/40-( )	SC	.687 (17.45)	.416 (10.57) .396 (10.06)	.510 (12.95) .490 (12.45)
M39012/55-( ) M39012/56-( ) M39012/57-( ) M39012/58-( ) M39012/59-( )	SMA	.530 (13.46)		.380 (9.65) .400 (10.16)

Note: Dimensions are in inches, metric equivalents are in parentheses.

FIGURE 35. MIL-C-39012 RF coaxial cable stripping dimensions.

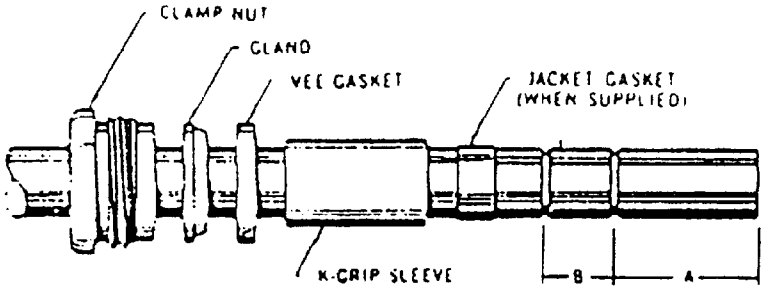

1. Cut cable end square. Slide K-grip sleeve and back end parts over jacket. Using jacket trim jig, make cuts A and B in the jacket.

2. Remove jacket to dimension "A". Flare or bulge back braid. Trim with scissors at the edge of the jacket.

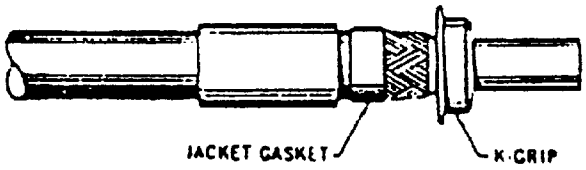

3. Remove jacket to dimension "B". Push K-grip over dielectric and under braid. Slide jacket gasket, when provided, forward to position flush with jacket edge. When the B dimension in the trim code is zero, push the K-GRIP under both braid and jacket, butting braid against the flange of the K-grip. Teflon jackets may be slit axially .250 inch (6.35 mm) in the two places to facilitate entry of the K-GRIP.

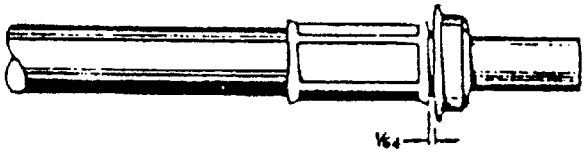

4. Slide K-grip sleeve against flange on K-grip. Form hex.

FIGURE 36. Cabling procedure for CP-200A (K-grip).

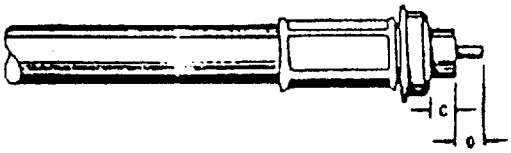

5. With dielectric trim jig, trim dielectric to dimension C. Cut center conductor to dimension D. Assemble internal O-ring seal and spacer, when provided, as shown below. When cable positioning insulators are used, adjust trim color dimensions as shown below and assemble as indicated.

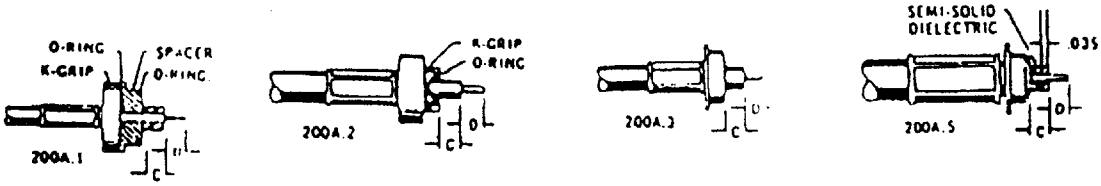

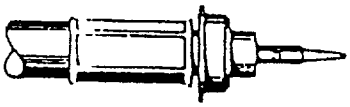

6. Solder or crimp contact to center conductor. For access type angle connectors, omit this step and proceed to step 7.

   For captive contacts, (a) assemble bushing and insulator. Attach contact or (b) assemble washer and (larger (cable end) insulator. Attach contact. Assemble smaller (mating end) insulator.

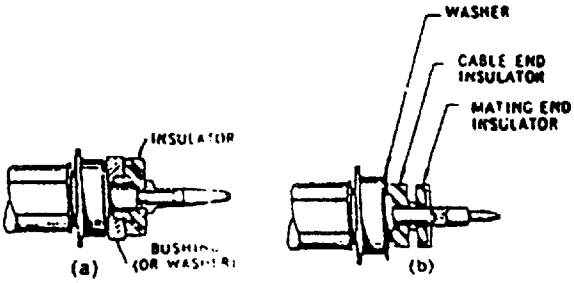

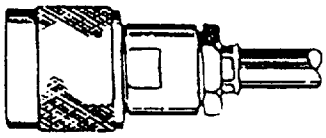

7. Thread assembly into connector and lock securely. Vee gasket must be split by braid clamp

FIGURE 36. Cabling procedure for CP-200A (K-grip) - Continued.

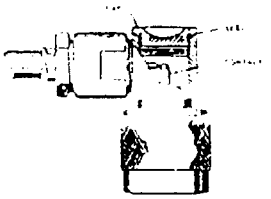

8. For access type angle connectors, solder center conductor in contact groove. Close access opening.

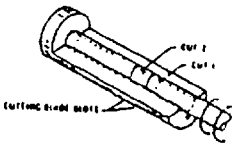

Jacket trim gauge - Used for locating jacket and braid trim dimensions. Butt cable against the end of the jig as shown and rotate in the jig while applying light thumb pressure to the cable over the blades.

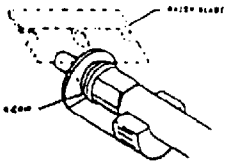

Dielectric trim jig (Weatherproof K-grip connectors) -Used for trimming dielectric and center conductor. Butt K-grip against end of jig with dielectric passing through hole as shown. Trim protruding dielectric flush with end face of jig to expose center conductor.

Trim code chart				
Code	Dimension A	Dimension B	Dimension C	Dimension D
201A	.500 (12.70)	.218 (5.54)	.110 (2.79)	.109 (2.77)
202A	.562 (14.27)	.218 (5.54)	.130 (3.30)	.156 (3.96)
205A	.609 (15.47)	.218 (5.54)	.212 (5.38)	.109 (2.77)
207A	.562 (14.27)	.218 (5.54)	.118 (3.00)	.156 (3.96)
209A	.593 (15.06)	.218 (5.54)	.043 (1.09)	.156 (3.96)
211A	.546 (13.87)	.218 (5.54)	.045 (1.14)	.109 (2.77)
213A	.656 (16.66)	.218 (5.54)	.041 (1.04)	.218 (5.34)
220A	.984 (24.99)	.218 (5.54)	.470 (11.94)	.125 (3.18)
221A	.812 (20.62)	.218 (5.54)	.371 (9.42)	.156 (3.96)
223A	.531 (13.49)	.218 (5.54)	.096 (2.44)	.156 (3.96)
230A	.593 (15.06)	.218 (5.54)	.043 (1.09)	.187 (4.75)
233A	.625 (15.88)	.187 (4.75)	.233 (5.92)	.234 (5.94)
234A	.593 (15.06)	.187 (4.75)	.187 (4.75)	.125 (3.18)

Dimensions are in inches. Metric equivalents are in parentheses.

FIGURE 36. Cabling procedure for CP-200A (K-grip) - Continued.

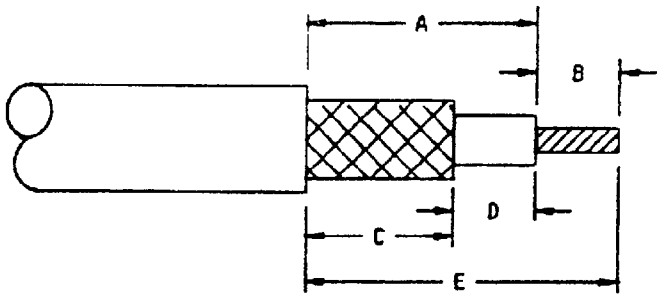

Code no.	Dimension A	Dimension B	Dimension C	Dimension D	Dimension E
1	.297 (7.54)	.219 (5.56)	.219 (5.56)	.078 (1.98)	.516 (13.11)
2	.328 (8.33)	.141 (3.58)	.219 (5.56)	.109 (2.77)	.469 (11.91)
3	.312 (7.92)	.190 (4.83)	.172 (4.37)	.140 (3.56)	.502 (12.75)
4	.328 (8.33)	.141 (3.58)	.250 (6.35)	.078 (1.98)	.469 (11.91)
5	.575 (14.61)	.150 (3.81)	.250 (6.35)	.325 (8.26)	.725 (18.42)
6	.212 (5.38)	.190 (4.83)	.072 (1.83)	.140 (3.56)	.402 (10.21)
7	.122 (3.10)	.525 (13.34)	.122 (3.10)	—	.647 (16.43)
8	.490 (12.45)	.197 (5.00)	.416 (10.57)	.074 (1.88)	.687 (17.45)
9	.427 (10.80)	.166 (4.22)	.353 (8.97)	.074 (1.88)	.593 (15.06)
10	.380 (9.65)	.150 (3.81)	.291 (7.39)	.089 (2.26)	.530 (13.46)
11	.281 (7.14)	.141 (3.58)	.281 (7.14)	—	.422 (10.72)
12	.344 (8.74)	.141 (3.58)	.344 (8.74)	—	.485 (12.32)

Dimensions are in inches. Metric equivalents are in parentheses.

FIGURE 37. Strip codes for coaxial cables.

A. HOW TO STRIP

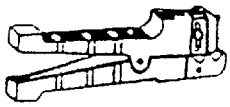

Proper orientation of this stripper is necessary for best use. The name and logo are on top of this stripper and the three blade edges point down when in the correct position (see picture 1).

.2

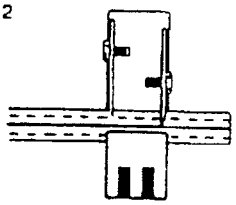

End-on view showing
Blades set for termination strip.

.3

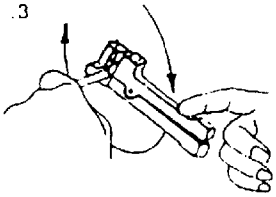

The depth of the blades on the right and the left of the stripper can be adjusted for the type of strip desired; end or window (center). Place the wire to be stripped in the notch closest to the pivot. Let the spring do the work; pushing the head together may result in nicked blades. Rotate the stripper down and away from you as shown. Rotating the opposite direction may cause the stripper to "walk" off the wire. About six to eight rotations will be necessary. This will give two cuts across the wire as shown (see picture 2 and 3).

.4

Wire after 6-8
Rotations.

.5

.6

Wire after
length wise cut.

The square blade on the front of the stripper is for making a lengthwise cut between the two parallel cuts. To make this cut, place the wire in the front notch and press the head together with your hand until you hear the click of the blade cutting through the insulation. Peel off the outer insulation between the two parallel cuts. If strip is an end strip, pull the slug off by hand (see pictures 4, 5, and 6).

Vendor PIN	Description	Blade PIn
45-162	For cable up to .125 inch (3.18 mm)	L-9225
45-163	For cable from .125 to .250 inch (3.18 to 6.35 mm)	L-9225
45-164	For cable from .250 to .562 inch (6.35 to 14.27 mm)	L-9226

NOte: Most consistent results are obtained by setting a single unit for a given wire size.

FIGURE 38. Instructions for Ideal coaxial cable stripper.

B. ADJUSTING THE BLADES

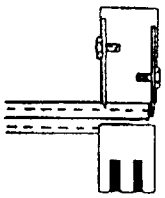

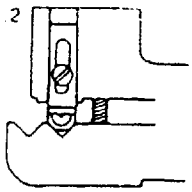

Setting the blades: Depth can be done using any of several methods. One method is to place the wire in the innermost notch so that the wire comes right up to the blade. Loosen the screw and adjust the blade to the desired depth. Tighten the screw being careful that the blade does not "walk" up or down as you tighten it. The washer under the screw should minimize this tendency (see pictures 1 and 2).

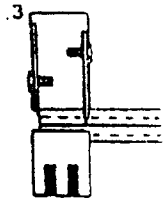

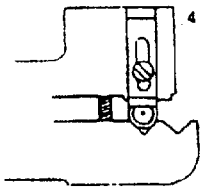

Turn the stripper around in relationship to the cable for setting the second blade on the other side of the stripper (see pictures 3 and 4).

Do a test strip. It may be necessary to "fine tune" the blade depths several times to achieve the precise strip needed. Follow the procedures given above each time.

FIGURE 38. Instructions for Ideal coaxial cable stripper - Continued.

C. ADJUSTING THE BLADES FOR PRECISION CUTS

1. Coaxial cable - two-step end cut for termination.

2. Coaxial cable - two-step end strip for termination.

3. Coaxial cable - three-step end strip for termination. The three-step strip can be accomplished in one of two ways: The first way would be to do a two-step strip as shown in no.2 above and then use an Ideal Stripmaster wire stripper for the dielectric. The second method would involve the use of two Ideal coaxial strippers.

4. Coaxial cable - window (center) strip.

5. Stranded wrapped cable - end strip. The stripper can also be used on layered and multi-layered cables, fiberglass insulated cables, wrapped insulated, multi-conductor cables with plastic outer jackets, and other similar wire and cable.

6. A rounded blade is included for slitting lengths of cable. It is to be attached to the front of the stripper as shown (see no.6 above). To slit a wire, simply place the wire to be slit in the front notch and pull the wire through.

FIGURE 38. Instructions for Ideal coaxial cable stripper - Continued.

Introduction: The following information is provided as "instructions" on product application and a "maintenance and inspection procedure" for the following termashield* ferrule crimping dies: 45061-3, 45062-3, 45-63-3, 45064-3, 45065-3, 45066-3, 45238-2, 45239-2, 45240-2, 45241-2 and 45158-2. These dies are used to crimp termashield ferrules on single and multiple conductor shielded wires with primary conductor insulation range of .033" to .270". To determine which dies, ferrule and insulating cap to use with single conductor shielded wire, refer to figure 39.

Table II. Color coding for crimping dies.

Tool number	Primary conductor insulation range	Crimping die catalogue number	Ferrule catalogue number			Insulation cap catalogue number	Die, ferrule and cap color code	Pacakge catalogue number
			Zinc plated with inspection hole	Tin plated without inspection hole	Tin plated with inspection hole			Contains equal quantities of insulation caps & zinc plated ferrules
59500 and 69270-1	.033 max	45061-3	327192 **	2-327192-1	———	327768	Green	330297 **
	.033 to .059	45062-3	323930	2-323930-1	2-323930-2	325009	Violet	330298
	.059 to .085	45063-3	323931	2-323931-1	2-323931-2	325010	White	330228
	.085 to .095	45064-3	323932	2-323932-1	2-323932-2	325011	Brown	330229
	.095 to .115	45065-3	323933	2-323933-1	2-323933-2	325012	Orange	330230
	.115 to .130	45066-3	323934	2-323934-1	2-323934-2	325013	Green	330231
59500	.130 to .145	45238-2	327137	2-327137-1	2-323937-2	328224	Violet	330232
	.145 to .184	45239-2	327138	2-327138-1	2-323938-2	328225	White *	330293
	.184 to .220	45240-2	327139	2-327139-1	2-323939-2	328226	Brown	330294
	.220 to .245	45241-2	327140	2-327140-1	2-323940-2	328227	Orange	330295
	.245 to .270	45158-2	327141	2-327141-1	2-323941-2	328228	Green	330296

* Indicates ferrule natural metallic color: insulating cap is transparent.
** Ferrule does not have braid inspection hole.

Figure 39. Catalogue numbers for AMP termashield ferrules.

Single conductor shielded wire:

a. Determine the outside (insulation) diameter of the primary conductor.

b. Locate this dimension in the appropriate conductor insulation range in column 2 of table II. Opposite the insulation range you will find the catalog numbers of the crimping die, ferrule and insulating cap to use. Note: Crimping dies, ferrules and insulating caps are color coded. For example: Use dies color coded green to crimp a green ferrule. Place a green insulating cap on the green ferrule after ferrule is crimped.

Multiple conductor shielded wire: To determine which dies, ferrule and insulating cap to use with shielded wire having two or more conductors, use the following formula: Multiply the outside (insulation) diameter of one primary conductor by the "factor", see figure 40, listed opposite the total number of conductors in the wire. For example:

a. If you had a 3-conductor shielded wire, you would first find the outside (insulation) diameter of one conductor. In this case we will use an O.D. of 0.082.

b. Opposite the number "3" (the number of primary conductors in wire) in column 1 of table III, you will find a multiplying factor of 2.17.

c. Multiply the O.D. of the one conductor (.082) by this factor (2.17). The result is .177. This figure (.177) is the primary conductor insulation range of the 3-conductor shielded wire.

d. Next, refer to column 2 of table II. Opposite the insulation range of .145 to .184, you will find catalogue numbers of the crimping die, ferrule and insulating cap to use.

Table III. Multiplication factors for shielded wires.

Number of conductors in wire	Multiply factor	Number of conductors in wire	Multiply factor
2	2.00	14	4.30
3	2.17	15	4.45
4	2.42	16	4.60
5	2.57	17	4.75
6	2.82	18	4.88
7	3.04	19	5.01
8	3.25	20	5.14
9	3.45	21	5.27
10	3.64	22	5.39
11	3.81	23	5.52
12	3.98	24	5.63
13	4.15	25	5.75

Figure 40. Multiplication factors.

Die insertion hand tool number 59500. Dies are coated with oil to prevent dust and corrosion. Wipe this oil from dies, particularly from crimping area.

a. To open tool handles, close handles until CERTI-CRIMP ratchet releases. See figure 41. Note that once ratchet is engaged, handles cannot be opened until they are fully closed.

b. Each set of dies consists of a male die and a female die. See figure 42.

c. Pull female die holding pin out of tool. Close handles until male die holding screw is visible. See figure 42.

d. Turn die holding screw slot in a vertical position. See figure 42.

e. Insert male die into head of tool with the color coded groove facing operator. Note: Do not attempt to insert dies into tool while holding dies together. Dies are inserted into tool separately.

f. Insert female die into head of tool. Both color coded grooves should now be facing operator.
g. Turn male die holding screw slot 1/4 turn to left or right.
h. Open handles slightly and push female die down so that hole in female die lines up with hole in tool. Insert female die holding pin. See figure 43.

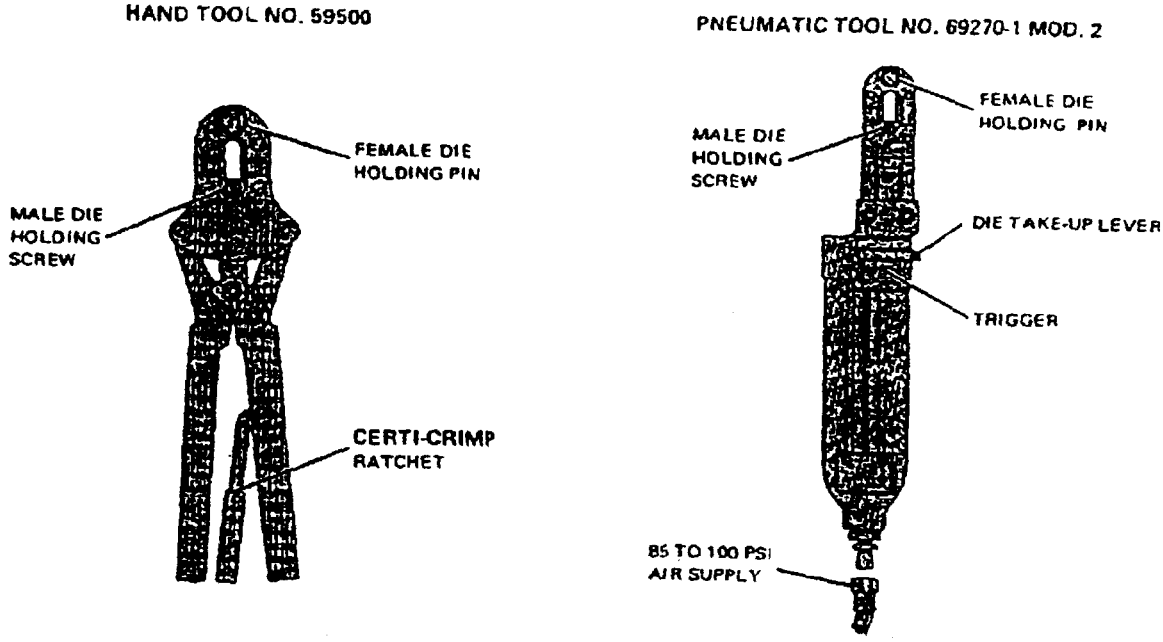

Figure 41. Hand and Pneumatic tools.

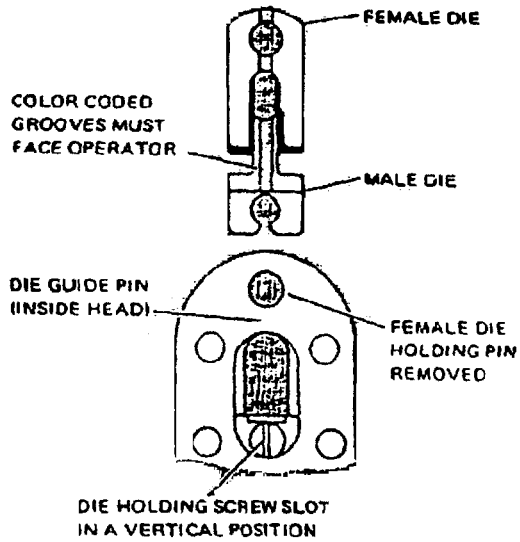

Figure 42. Male and female dies.

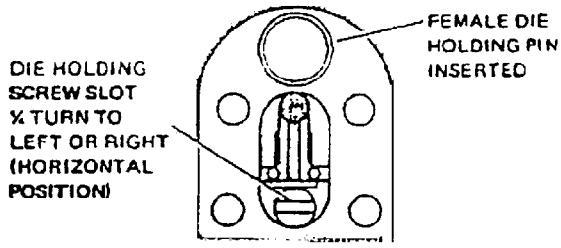

Figure 43. Female die with holding pin inserted.

Die insertion Pneumatic tool number 69270-1 MOD. 2. Dies are coated with oil to prevent rust and corrosion. Wipe this oil from dies, particularly from crimping area. Pneumatic tool number 69270-1, Model 2 is equipped with a pneumatic die take up lever. See figure 42. This take up lever is used to hold the ferrule in a proper position prior to crimping.

a. Each set of dies consists of a male die and a female die. See figure 42.
b. Connect air supply (85 to 100 PSI).
c. Pull female die holding pin out of tool. Depress take up lever until male die holding screw is visible. See figure 42.
d. With take up lever depressed, turn die holding screw slot in a vertical position. See figure 42.
e. Insert male die into head of tool with the color coded groove facing operator. Note: Do not attempt to insert dies into tool while holding dies together. Dies are inserted into tool separately.
f. Insert female die into head of tool. Both color coded grooves should now be facing operator.
g. Turn male die holding screw 1/4 turn to left or right (horizontal position). See figure 43.
h. Release take up lever, then push female die down so that hole in female die lines up with hole in tool. Insert female die holding pin. See figure 43.

Die removal hand tool number 59500.

a. Remove female die holding pin.
b. Close handles until male die holding screw is visible. See figure 44.
c. Turn male die holding screw slot in a vertical position. See figure 44.
d. Push die set up with a small screwdriver or drift pin just enough to permit female die to be pulled out of tool.
e. Remove male die and insert die holding pin back into tool.

Die removal Pneumatic tool number 69270-1 Mod. 2.

a. Remove female die holding pin.
b. Depress take up lever until male die holding screw is visible. See figure 44.
c. With take up lever depressed, turn male die holding screw slot in a vertical position. See figure 44.
d. Push die set up with a small screwdriver or drift pin just enough to permit female die to be pulled out of tool.
e. Remove male die and insert die holding pin back into tool.

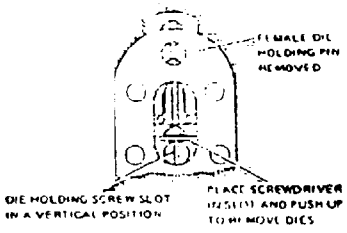

Figure 44. Female die with holding pin removed.

Wire stripping and crimping procedures.

Wire stripping
a. Strip shielded wire as shown in figure 45.
b. Strip ground wire to dimensions given in figure 46.

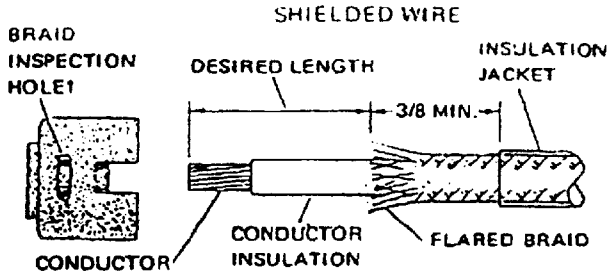

† See Figure 1 for part numbers of ferrules containing inspection hole

Figure 45. Stripping shielded wire.

Ferrule number	Recommended ground wire		Strip length
	Number of wires	Max. insulation diameter	
D-327192-D	One # 24	.063	1/4 min
	Two # 24's	.055	
	One # 22	.068	
D-323930-D through D-323934-D	One # 20	.078	
	One # 22	.078	
	Two # 22's	.068	
D-327137-D through D-327141-D	One # 18	No limit on insulation diameter	7/16 min
	One # 20		
	Two # 20's		
	One # 22		
	Two # 22's		

Figure 46. Recommended ground wires and dimensions.

Crimping procedures.

a. Place ferrule on shielded wire as shown in figure 47. Flare braid so that it will pass around support sleeve of ferrule.

b. Insert ground wire into ferrule. See figure 47. Note: On six smaller ferrules (part number □-327192-□ and □-323930-□ through □-323934-□)slide ground wire insulation under ferrule skirt approximately 1/16 inch. On five large ferrules (part number □-327137-□ through □-327141-□), DO NOT slide the ground wire insulation under ferrule skirt.

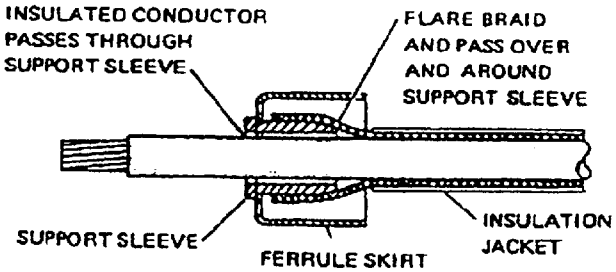

Braid must be visible through inspection hole. See Figure 1 for ferrules containing inspection hole.

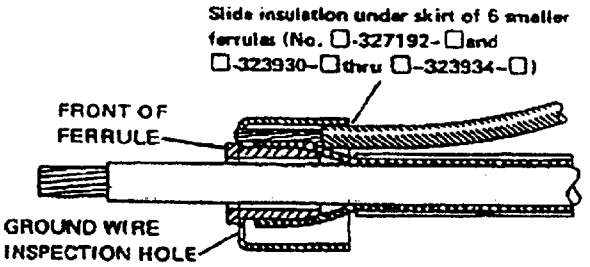

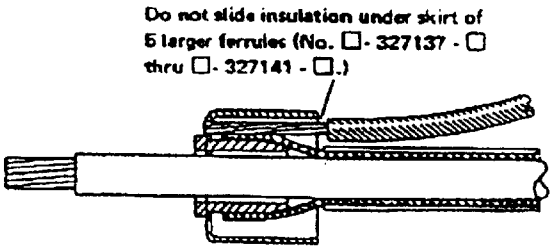

Figure 47. Crimping shielded wire.

Hand tool

a. Open tool handles all the way.

b. Place ferrule with shielded wire and ground wire attached in lower crimp area of dies. Push ferrule all the way into tool. See figure 48.

c. Hold ground wire and shielded wire in position and close handles until CERTI-CRIMP ratchet releases. Open handles and remove crimped ferrule.

Pneumatic tool

a. Place ferrule, with shielded wire and ground wire attached, in lower crimp area of dies. Push ferrule all the way into tool. See figure 48.

b. Hold ground wire and shielded wire in position and depress take up lever to hold ferrule in place.

c. Simultaneously release take up lever and depress trigger to complete crimp. Release trigger and remove crimped ferrule.

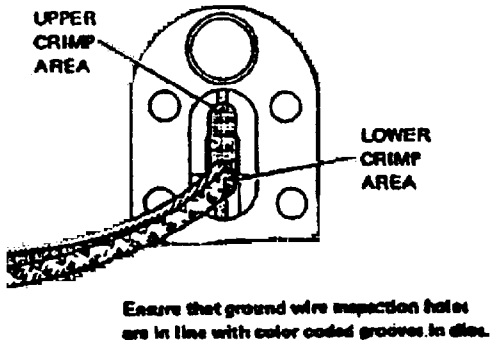

Figure 48. Crimping the ferrule.

Ferrule insulating caps.

a. Place insulating cap on ferrule as shown in figure 49.

b. Insulating caps are color coded for easy matching with ferrule. To select correct insulating cap, refer to figure 39.

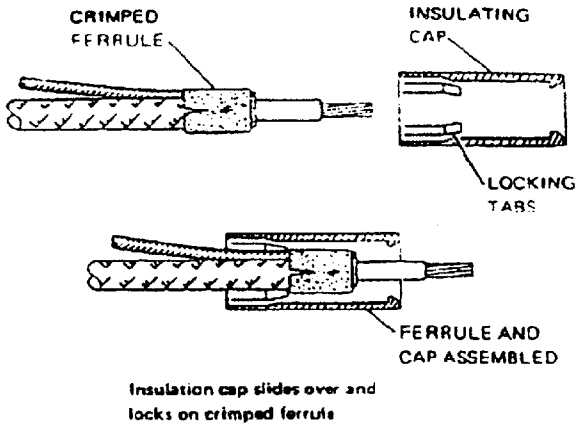

Figure 49. Ferrule insulating caps.

Cleaning. Do not allow deposits of dirt, grease and foreign matter to accumulate in the die closure area and on the bottoming surfaces of the dies. These deposits may prevent the dies from bottoming fully and may also cause excessive wear in the die closure surfaces, thereby affecting the quality of the crimp. The dies should be wiped clean frequently with a clean cloth.

Visual inspection. Visually inspect the die closure surfaces for broken or chipped conditions. Although dies may gage within permissible limits, worn or damaged die closure surfaces are objectionable and can affect the quality of the crimp. Examples of possible damaged die surfaces are shown in figure 50.

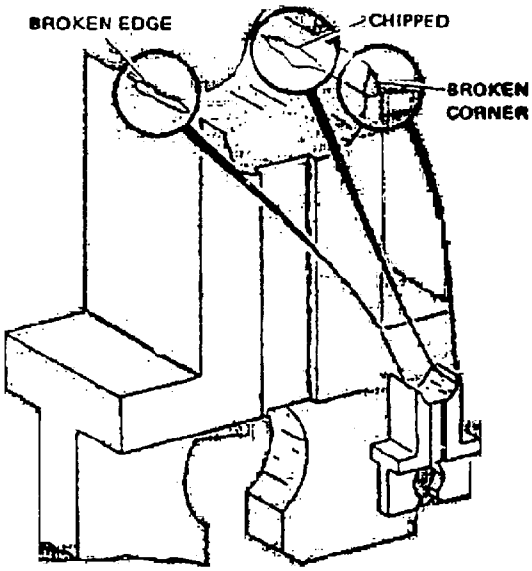

Figure 50. Example of damaged die surfaces.

Die closure inspection. The die closure inspection is accomplished using GO-NO-GO plug gages. See figure 51 for plug gage design and the GO-NO-GO dimensions of the plug gage members.

a. Remove traces of oil and dirt from die crimping area and plug gage members.
b. Insert dies in tool.
c. When using hand tool, close handles of tool until dies bottom. Do not apply additional pressure to tool handles.
d. When using pneumatic tool, reduce air supply pressure to a range between 15-20 PSI. Depress trigger to bottom dies.
e. With crimping dies bottomed, check the die closure using the proper plug gage. Hold gage in straight alignment with the die closure and carefully try to insert without forcing the GO member, and then the NO-GO member. See figure 52. The GO member must pass completely through the die closure.
f. The NO-GO member may enter partially, but must not pass completely through the die closure.
g. If the die closures meet the GO-NO-GO gage conditions, the dies may be considered dimensionally correct.

Certi-crimp ratchet inspection. The certi-crimp ratchet feature on the hand tools should be checked to make certain that the ratchet does not release prematurely allowing dies to open before they have fully bottomed.

a. Make a test crimp using ferrule, shielded wire and ground wire. When this crimp is made, close handles until the ratchet is free, however, DO NOT RELAX PRESSURE ON TOOL HANDLES.
b. If a 0.001 or smaller shim can be inserted between the bottoming surfaces of the dies, or if there is no opening whatever, the certi-crimp ratchet is satisfactory.
c. If the clearance between the bottoming surfaces of the dies is greater than 0.001, the dies are considered as not bottoming.

Replacement parts. See figure 53 for a list of replacement parts.

SUGGESTED PLUG GAGE DESIGN

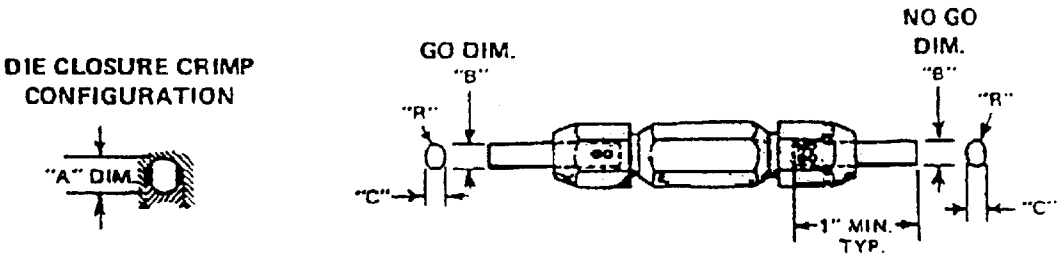

Die set number	Die closure dimensions, "A",		Gage member dimensions, "B"		"C" (max)	"R" (max)
	GO	NO-GO	GO	NO-GO		
45158-2	.3770	.3830	.3770 - .3773	.3829 - .3830	.374	.187
45238-2	.2850	.2910	.2850 - .2853	.2909 - .2910	.170	.141
45239-2	.3070	.3130	.3070 - .3073	.3129 - .3130	.180	.152
45240-2	.3310	.3370	.3310 - .3313	.3369 - .3370	.220	.164
45241-2	.3550	.3610	.3550 - .3553	.3609 - .3610	.280	.176
45061-3	.1220	.1280	.1220 - .1223	.1279 - .1280	.100	.050
45062-3	.1490	.1550	.1490 - .1493	.1549 - .1550	.090	.045
45063-3	.1740	.1800	.1740 - .1743	.1799 - .1800	.090	.045
45064-3	.1920	.1980	.1920 - .1923	.1979 - .1980	.160	.080
45065-3	.2190	.2250	.2190 - .2193	.2249 - .2250	.110	.055
45066-3	.2340	.2400	.2340 - .2343	.2399 - .2400	.090	.045

Plug gage dimensions apply when dies are bottomed, but not under pressure.
Material - tool steel.

Figure 51. Die closure dimensions for Go-N-GO plugs.

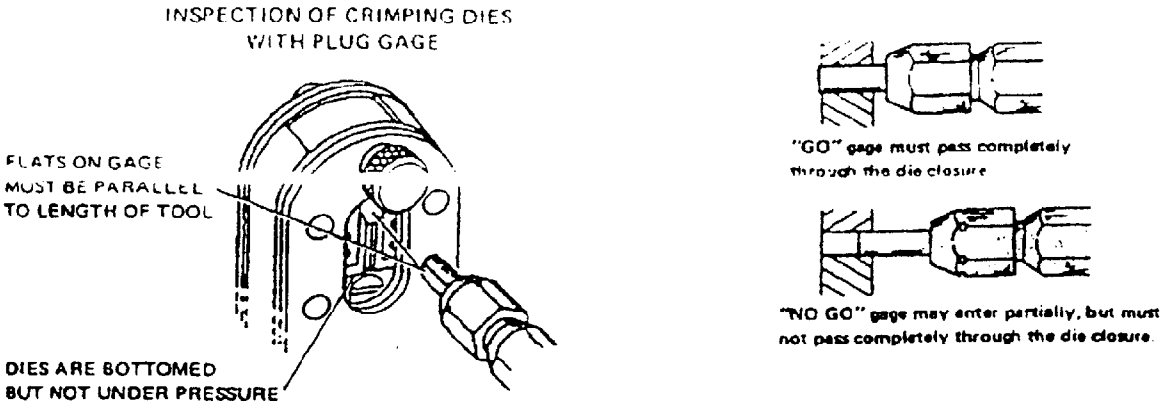

Figure 52. Die closure inspection.

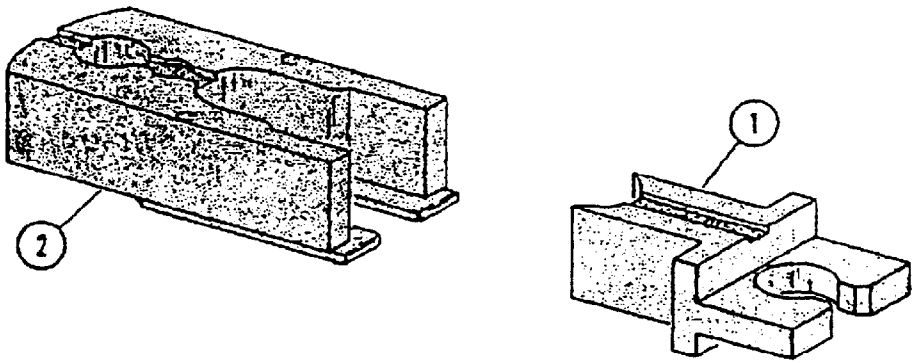

Item	Description	Die set numbers						
		45158-2	45238-2	45239-2	45240-2	45241-2	45061-3	45062-3
1	Male die	2-306144-6	2-306144-2	2-306144-3	2-306144-4	2-306144-5	4-306144-1	45902-6
2	Female die	304803-6	45250-2	45251-2	45252-2	45253-2	304803-7	59654

Item	Description	Die set numbers			
		45063-3	45064-3	45065-3	45066-3
1	Male die	45902-7	45902-8	45902-9	1-45902-0
2	Female die	59654-1	59656	59656-1	59656-2

Figure 53. Replacement die inserts.

TABLE IV. F-15 tool selection chart.

Vendor (code) connector series and type	Basic connector PIN	Contact PIN	Pin or socket	Color bands 1st	Color bands 2nd	Color bands 3rd	Bin code	Contact size Mating end	Contact size Wire barrel	Wire range or cable	Crimp tool	Turret head positioner or die set	Installing tool	Removal tool	Removal tool for unwired contacts
MIL-C-24308 Rectangular Rack and panel Rear release contacts	M24308/2-( ) M24308/4-( )	M39029/64-369 or M24308/11-1	P	ORN	BLU	WHT	369	20H0	20H0	20 - 24	M22520/2-01	M22520/2-08	M81969/39-01 (green end)	M82969/39-01 (white end)	
		M39029/63-368 or M24308/10-1	S	ORN	BLU	GRA	368								
MIL-C-26500 Circular Threaded or Bayonet Coupling Front release contacts	MS24264 MS24266 MS27613 MS27614 MS27615	M39029/31-241 or MS24254-20P	P	RED	YEL	BRN	241	20	20	20 - 24	M22520/1-01 or M22520/2-01	M22520/1-02 (red) or M22520/2-02	M81969/17-09	M81969/19-06	M81969/19-06
		M39029/32-260 or MS24255-20S	S	RED	BLU	BLK	260								
		M39029/31-229 or MS24254-16P	P	RED	RED	WHT	229	16	16	16 - 20	M22520/1-01	M22520/1-02 (blue)	M81969/17-04	M81969/19-01	M81969/19-01
		M39029/32-248 or MS24255-16S	S	RED	YEL	GRA	248								
		M39029/31-235 or MS24254-12P	P	RED	ORN	GRN	235	12	12	12 - 14		M22520/1-02 (yellow)	M81969/17-05	M81969/19-02	M81969/19-02
		M39029/32-254 or MS24255-12S	S	RED	GRN	YEL	254								
MIL-C-26518 Miniature Rectangular Rack and Panel front release contacts	MS24285 (socket contacts resilient front insert)	M39029/31-241 or MS24254-20P	P	RED	YEL	BRN	241	20	20	20 - 24	M22520/1-01 or M22520/2-01	M22520/1-02 (red) M22520/2-02	M81969/17-03	M81969/19-06	M81969/19-06
		M39029/32-260 or MS24255-20S	S	RED	BLU	BLK	260								
	MS24286 (pin contacts resilient front insert)	M39029/31-229 or MS24254-16P	P	RED	RED	WHT	229	16	16	16 - 20	M22520/1-01	M22520/1-02 (blue)	M81969/17-04	M81969/19-01	M81969/19-01
		M39029/32-248 or MS24255-16S	S	RED	YEL	GRA	248								
		M39029/54-342 or MS27184-22P	P	ORN	YEL	RED	342	12 - 12 coaxial		Cable group A 1/	Inner contact M22520/2-01 | M22520/2-33		M81969/17-05	M81969/19-02	M81969/19-02
		M39029/55-344 or MS27185-22S	S	ORN	YEL	YEL	344				Outer ferrule M22520/5-01 | M22520/5-03(A)				

See footnotes at end of table.

TABLE IV. F-15 tool selection chart - Continued.

Vendor (code) connector series and type	Basic connector PIN	Contact PIN	Pin or socket	Color bands 1st	Color bands 2nd	Color bands 3rd	Bin code	Contact size: Mating end	Contact size: Wire barrel	Wire range or cable	Crimp tool	Turret head positioner or die set	Installing tool	Removal tool	Removal tool for unwired contacts
MIL-C-26518 (continued) Miniature Rectangular Rack and Panel Front release contacts	MS27399 (socket contacts hard front insert)	M39029/32-260 or MS24255-20S	S	RED	BLU	BLK	260	20	20	20 - 24	M22520/1-01 or M22520/2-01	M22520/1-02 M22520/2-02	M81969/17-09	M81969/19-06	M81969/19-06
		M39029/32-248 or MS24255-16S	S	RED	YEL	GRA	248	16	16	16 - 20	M22520/1-01	M22520/1-02 (blue)	M81969/17-04	M81969/19-01	M81969/19-01
		M39029/55-344 or MS27185-22S	S	ORN	YEL	YEL	344	12 - 12 coaxial		Cable group A 1/	Inner contact M22520/2-01; Outer ferrule M22520/5-01	Inner contact M22520/2-33; Outer ferrule M22520/5-03(A)	M81969/17-05	DRK114-12	DRK114-12
MIL-C-38999 Series I Scoop-proof Circular Bayonet coupling Rear-release contacts Contact application Series LA 150°C MS27690 MS27493 Series IB 200°C MS27494 MS27655	MS27466 MS27467 MS27468 MS27496 MS27498 MS27505 MS27515 MS27652 MS27653 MS27654 MS27656 MS27661 MS27665	M39029/58-360 or MS27493-22D	P	ORN	BLU	BLK	360	22	22D	22 - 28	M22520/2-01	M22520/2-09	M81969/8-01 or M81969/14-01 (green end)	M81969/8-02 or M81969/14-01 (white end)	DRK105-1SA with DRK105-22M-2 (yellow probe)
		M39029/56-348 or MS27490-22D	S	ORN	YEL	GRA	348					M22520/2-07			
		M39029/58-361 or MS27493-22M	P	ORN	BLU	BRN	361	22	22M	24 - 28		M22520/2-09			
		M39029/56-349 or MS27490-22M	S	ORN	YEL	WHT	349					M22520/2-07			
		M39029/58-362 or MS27493-22	P	ORN	BLU	RED	362	22	22	24 - 26		M22520/2-09	M81969/8-03 or M81969/14-01 (green end)	M81969/8-04 or M81969/14-01 (white end)	DRK105-1SA with DRK105-22-2 (green probe)
		M39029/56-350 or MS27490-22	S	ORN	GRN	BLK	350					M22520/2-07			
		M39029/58-363 or MS27493-20	P	ORN	BLU	ORN	363	20	20	20 - 24	M22520/1-01 or M22520/2-01	M22520/1-04 (red)	M81969/8-05 or M81969/14-02 (red end)	M81969/8-06 or M81969/14-02 (white end)	DRK105-1SA with DRK105-20-2 (red probe)
		M39029/56-351 or MS27490-20	S	ORN	GRN	BRN	351					M22520/2-10			

See footnotes at end of table.

TABLE IV. F-15 tool selection chart - Continued.

Vendor (code) connector series and type	Basic connector PIN	Contact PIN	Pin or socket	Color bands 1st	Color bands 2nd	Color bands 3rd	Bin code	Contact size: Mating end	Contact size: Wire barrel	Wire range or cable	Crimp tool	Turret head positioner or die set	Installing tool	Removal tool	Removal tool for unwired contacts
MIL-C-38999 (continued) Series I Scoop-proof Circular Bayonet coupling Rear-release contacts Contact application Series IA 150°C MS27490 MS27493 Series IB 200°C MS27494 MS27655	MS27466 MS27467 MS27468 MS27496 MS27498 MS27505 MS27515 MS27652 MS27653 MS27654 MS27656 MS27661 MS27665	M39029/58-364 or MS27493-16	P	ORN	BLU	YEL	364	16	16	16 - 20	M22520/1-01	M22520/1-04 (blue)	M81969/8-07 or M81969/14-03 (blue end)	M81969/8-08 or M81969/14-03 (white end)	DRK105-1SA with DRK105-16-2 (blue probe)
		M39029/56-352 or MS27490-16	S	ORN	GRN	RED	352								
		M39029/58-365 or MS27493-12	P	ORN	BLU	GRN	365	12	12	12 - 14		M22520/1-04 (yellow)	M81969/8-09 or M81969/14-04 (yellow end)	M81969/08-10 or M81969/14-04 (white end)	DRK105-1SA with DRK105-12-2 (yellow probe)
		M39029/56-353 or MS27490-12	S	ORN	GRN	ORN	353								
		M39029/28-409 or M39029/28-12B	P	YEL	BLK	WHT	409	12 - 12 coaxial		RG180/U RG195/U microdot 293-3922	Inner contact: M22520/2-01 | M22520/2-34 Outer ferrule: GS200 | G2P330				
		M39029/75-417 or M39029/75-12B	S	YEL	BRN	VIO	417								
		M39029/60-367 or MS27536	P	ORN	BLU	VIO	367	8 - 8 coaxial			Inner contact: M22520/2-01 | M22520/2-31 Outer ferrule: M22520/5-01 | M22520/5-41(B)		None required	114008	114008
		M39029/59-366 or MS27535	S	ORN	BLU	BLU	366								

See footnotes at end of table.

TABLE IV. F-15 tool selection chart - Continued.

Vendor (code) connector series and type	Basic connector PIN	Contact PIN	Pin or socket	Color bands 1st	2nd	3rd	Bin code	Contact size Mating end	Wire barrel	Wire range or cable	Crimp tool	Turret head positioner or die set	Installing tool	Removal tool	Removal tool for unwired contacts
MIL-C-38999 Series II Low silhouette Circular Bayonet coupling Rear release contacts Contact application Series IIA 150°C MS27491 MS27494 Series IIB 200°C MS27492 MS27494	MS27472 MS27473 MS27474 MS27479 MS27480 MS27481 MS27484 MS27497 MS27499 MS27500 MS27504 MS27508 MS27513 MS27664	M39029/58-360 or MS27493-22D	P	ORN	BLU	BLK	360	22	22D	22 - 28	M22520/2-01	M22520/2-09	M81969/8-01 or M81969/14-01 (green end)	M81969/8-02 or M81969/14-01 (white end)	DRK105-1SA with DRK105-22M-2 (yellow probe)
		M39029/57-357 or MS27491-22D	S	ORN	GRN	VIO	357					M22520/2-06			
		M39029/58-361 or MS27493-22M	P	ORN	BLU	BRN	361	22	22M	24 - 28		M22520/2-09			
		M39029/57-355 or MS27491-22M	S	ORN	GRN	GRN	355					M22520/2-06			
		M39029/58-362 or MS27493-22	P	ORN	BLU	RED	362	22	22	22 - 26		M22520/2-09	M81969/8-03 or M81969/14-01 (green end)	M81969/8-04 or M81969/14-01 (white end)	DRK105-1SA with DRK105-22-2 (green probe)
		M39029/57-356 or MS27491-22	S	ORN	GRN	BLU	356					M22520/2-06			
		M39029/58-363 or MS27493-20	P	ORN	BLU	ORN	363	20	20	20 - 24	M22520/1-01 or M22520/2-01	M22520/1-04 (red)	M81969/8-05 or M81969/14-02 (red end)	M81969/8-06 or M81969/14-02 (white end)	DRK105-1SA with DRK105-20-2 (red probe)
		M39029/57-357 or MS27491-20	S	ORN	GRN	VIO	357					M22520/2-10			
		M39029/58-364 or MS27493-16	P	ORN	BLU	YEL	364	16	16	16 - 20	M22520/1-01	M22520/1-04 (blue)	M81969/8-07 or M81969/14-03 (blue end)	M81969/8-08 or M81969/14-03 (white end)	DRK105-1SA with DRK105-16-2 (blue probe)
		M39029/57-358 or MS27491-16	S	ORN	GRN	GRA	358								
		M39029/58-365 or MS27493-12	P	ORN	BLU	GRN	365	12	12	12 - 14		M22520/1-04 (yellow)	M81969/8-09 or M81969/14-04 (yellow end)	M81969/8-10 or M81969/14-04 (white end)	DRK105-1SA with DRK105-12-2 (yellow probe)
		M39029/57-359 or MS27491-12	S	ORN	GRN	WHT	359								
		M39029/28-409 or M39029/28-12B	P	YEL	BLK	WHT	409	12 - 12 coaxial		RG180/U RG195/U microdot 293-3922	Inner contact M22520/2-01 | M22520/2-34				
		M39029/27-402 or M39029/27-12B	S	YEL	BLK	RED	402				Outer ferrule GS200 | 62P330				

See footnotes at end of table.

TABLE IV. F-15 tool selection chart - Continued.

Vendor (code) connector series and type	Basic connector PIN	Contact PIN	Pin or socket	Color bands 1st	Color bands 2nd	Color bands 3rd	Bin code	Contact size: Mating end	Contact size: Wire barrel	Wire range or cable	Crimp tool	Turret head positioner or die set	Installing tool	Removal tool	Removal tool for unwired contacts
MIL-C-38999 Series III Tri-start coupling Rear release contacts	D38999/20 D38999/24 D38999/26	M39029/58-360 or MS27493-22D	P	ORN	BLU	BLK	360	22	22D	22 - 28	M22520/2-01	M22520/2-09	M81969/8-01 or M81969/14-01 (green end)	M81969/8-02 or M81969/14-01 (white end)	DRK105-1SA with DRK105-22M-2 (yellow probe)
		M39029/56-348 or MS27490-22D	S	ORN	YEL	GRA	348					M22520/2-07			
		M39029/58-361 or MS27493-22M	P	ORN	BLU	BRN	361	22	22M	24 - 28		M22520/2-09			
		M39029/56-349 or MS27490-22M	S	ORN	YEL	WHT	349					M22520/2-07			
		M39029/58-362 or MS27493-22	P	ORN	BLU	RED	362	22	22	22 - 26		M22520/2-09	M81969/8-03 or M81969/14-01 (green end)	M81969/8-04 or M81969/14-01 (white end)	DRK105-1SA with DRK105-22-2 (green probe)
		M39029/56-350 or MS27490-22	S	ORN	GRN	BLK	350					M22520/2-07			
		M39029/58-363 or MS27493-20	P	ORN	BLU	ORN	363	20	20	20 - 24	M22520/1-01 or M22520/2-01	M22520/1-04 (red)	M81969/8-05 or M81969/14-02 (red end)	M81969/8-06 or M81969/14-02 (white end)	DRK105-1SA with DRK105-20-2 (red probe)
		M39029/56-351 or MS27491-20	S	ORN	GRN	BRN	351					M22520/2-10			
		M39029/58-364 or MS27493-16	P	ORN	BLU	YEL	364	16	16	16 - 20	M22520/1-01	M22520/1-04 (blue)	M81969/8-07 or M81969/14-03 (blue end)	M81969/8-08 or M81969/14-03 (white end)	DRK105-1SA with DRK105-16-2 (blue probe)
		M39029/57-352 or MS27490-16	S	ORN	GRN	RED	352								
		M39029/58-365 or MS27493-12	P	ORN	BLU	GRN	365	12	12	12 - 14		M22520/1-04 (yellow end)	M81969/8-09 or M81969/14-04 (yellow end)	M81969/8-10 or M81969/14-04 (white end)	
		M39029/57-353 or MS27490-12	S	ORN	GRN	ORN	353								

See footnotes at end of table.

TABLE IV. F-15 tool selection chart - Continued.

Vendor (code) connector series and type	Basic connector PIN	Contact PIN	Pin or socket	Color bands 1st	Color bands 2nd	Color bands 3rd	Bin code	Contact size: Mating end	Contact size: Wire barrel	Wire range or cable	Crimp tool	Turret head positioner or die set	Installing tool	Removal tool	Removal tool for unwired contacts
MIL-C-39012 RF-coaxial	"N" series M39012/01-0501 Straight plug	M39012/1-10	P							RG214/U RG225/U RG393/U	Inner contact M22520/1-01	M22520/1-13			
		M39012/1-50	-								Outer ferrule M22520/5-01	M22520/5-25(A)			
	"N" series M39012/03-0501 Receptacle	M39012/3-10	S								Inner contact M22520/1-01	M22520/1-14			
		M39012/3-50	-								Outer ferrule M22520/5-01	M22520/5-61			
	"N" series M39012/05-0501 Right angle plug	M39012/5-10	P								Inner contact M22520/1-01	M22520/1-13			
		M39012/5-50	-								Outer ferrule M22520/5-01	M22520/5-61			
	"BNC" series M39012/16-0503 Plug	M39012/16-10	P							RG122/U	Inner contact M22520/1-01	M22520/1-12			
		M39012/16-51	-								Outer ferrule M22520/5-01	M22520/5-05(A)			
	"BNC" series M39012/20-0503 Right angle plug	M39012/20-10	P							RG142/U RG400/U	Inner contact M22520/1-01	M22520/1-12			
		M39012/20-51	-								Outer ferrule M22520/5-01	M22520/5-19(B)			
	"TNC" series M39012/26-0503 Plug	M39012/26-10	P								Inner contact M22520/1-01	M22520/1-12			
		M39012/26-51	-								Outer ferrule M22520/5-01	M22520/5-35(A)			
	"TNC" series M39012/28-0503 Receptacle	M39012/28-10	S								Inner contact M22520/1-01	M22520/1-12			
		M39012/28-51	-								Outer ferrule M22520/5-01	M22520/5-19(B)			

See footnotes at end of table.

TABLE IV. F-15 tool selection chart - Continued.

Vendor (code) connector series and type	Basic connector PIN	Contact PIN	Pin or socket	Color bands 1st	Color bands 2nd	Color bands 3rd	Bin code	Contact size: Mating end	Contact size: Wire barrel	Wire range or cable	Crimp tool	Turret head positioner or die set	Installing tool	Removal tool	Removal tool for unwired contacts
MIL-C-39012 (continued) RF-coaxial	"TNC" series M39012/29-0503 Receptacle	M39012/29-10	S							RG142/U RG400/U	Inner contact M22520/1-01	M22520/1-12 (blue)			
		M39012/29-51									Outer ferrule M22520/5-01	M22520/5-11(A)			
	"TNC" series M39012/30-0501 Right angle plug	M39012/30-12	P							RG122/U	Inner contact M22520/1-01	M22520/1-12 (blue)			
		M39012/30-50	-								Outer ferrule M22520/5-01	M22520/5-05(B)			
	"TNC" series M39012/30-0503 Plug	M39012/30-10	P							RG142/U RG400/U	Inner contact M22520/1-10	M22520/1-12 (green)			
		M39012/30-51	-								Outer ferrule M22520/5-01	M22520/5-19(B)			
	"SC" series M39012/35-0501 Plug	M39012/35-10	P							RG214/U RG225/U RG393/U	Inner contact M22520/1-01	M22520/1-14 (blue)			
		M39012/35-50	-								Outer ferrule M22520/5-01	M22520/5-61			
	"SC" series M39012/35-0503 Plug	M39012/35-11	P							RG142/U RG400/U	Inner contact M22520/1-01	M22520/1-14 (blue)			
		M39012/35-52	-								Outer ferrule M22520/5-01	M22520/5-19(B)			
	"SC" series M39012/39-0501 Plug	M39012/39-10	P							RG214/U RG225/U RG393/U	Inner contact M22520/1-01	M22520/1-13 (blue)			
		M39012/39-50	-								Outer ferrule M22520/5-01	M22520/5-61			

See footnotes at end of table.

TABLE IV. F-15 tool selection chart - Continued.

Vendor (code) connector series and type	Basic connector PIN	Contact PIN	Pin or socket	Color bands 1st	Color bands 2nd	Color bands 3rd	Bin code	Contact size: Mating end	Contact size: Wire barrel	Wire range or cable	Crimp tool	Turret head positioner or die set	Installing tool	Removal tool	Removal tool for unwired contacts
MIL-C-39012 (continued) RF-coaxial	"SC" series M39012/39-0503 Right angle plug	M39012/39-11	P							RG142/U RG400/U	Inner contact M22520/1-01	M22520/1-13 (blue)			
		M39012/39-52	-								Outer ferrule M22520/5-01	M22520/5-19(B)			
	"SC" series M39012/40-0501 Receptacle	M39012/40-10	S							RG214/U RG225/U RG393/U	Inner contact M22520/1-01	M22520/1-14 (red)			
		M39012/40-50	-								Outer ferrule M22520/5-01	M22520/5-61			
	"SMA" series M39012/55-4502 Plug	M39012/55-10	P							RG400/U	Inner contact M22520/1-01	M22520/1-15			
		M39012/55-50	-								Outer ferrule M22520/5-01	M22520/5-19(B)			
MIL-C-5015 "3450" series Circular Threaded coupling Rear release contacts	MS3450 MS3456	M39029/29-212 or M39029/29-16-16	P	RED	BRN	RED	212	16	16	16 - 20	M22520/1-01	M22520/1-01 (blue)	DAK83-16 or M81969/14-03 (blue end)	DRK83-16 or M81969/14-03 (white end)	M81969/30-0[illegible]
		M39029/30-218 or M39029/30-16-16	S	RED	BRN	GRA	218								
		M39029/29-213 or M39029/29-12-12	P	RED	BRN	ORN	213	12	12	12 - 14		M22520/ -02 (yellow)	DAK83-12 or M81969/14-04 (yellow end)	DRK83-12 or M81969/14-04 (white end)	M81969/30-07
		M39029/30-219 or M39029/30-12-12	S	RED	BRN	WHT	219								
MIL-C-81511 Series I Circular Bayonet coupling Front release contacts	M81511/21 M81511/23 M81511/25 M81511/26 M81511/35 M81511/36 M81511/37 M81511/38	M39029/47-314 or MS90461B23-22	P	ORN	BRN	YEL	314	23	22	22 - 26	M22520/2-01	M22520/2-03	M81969/2-01	M81969/3-05	
		M39029/33-264 or MS3343B23-22	S	RED	BLU	YEL	264							M81969/3-01	

See footnotes at end of table.

TABLE IV. F-15 tool selection chart - Continued.

Vendor (code) connector series and type	Basic connector PIN	Contact PIN	Pin or socket	Color bands 1st	Color bands 2nd	Color bands 3rd	Bin code	Contact size Mating end	Contact size Wire barrel	Wire range or cable	Crimp tool	Turret head positioner or die set	Installing tool	Removal tool	Removal tool for unwired contacts
MIL-C-81511 (continued) Series II Circular Bayonet coupling Front release contacts	M81511/1 M81511/3 M81511/5 M81511/6 M81511/31 M81511/32 M81511/33 M81511/34	M39029/47-314 or MS90461823-22	P	ORN	BRN	YEL	314	23	22	22 - 26	M22520/2-01	M22520/2-03	M81969/2-01	M81969/3-05	
		M39029/46-304 or MS90460823-20	S	ORN	BLK	YEL	304							M81969/3-01	
MIL-C-81582 Circular Bayonet coupling Front release contacts	M81582/1	M39029/31-241 or MS24254-20P	P	RED	YEL	BRN	241	20	20	20 - 24	M22520/1-01 or M22520/2-01	M22520/1-02 (red) or M22520/2-02	M81969/17-09	M81969/19-07	
		M39029/32-260 or MS24255-20S	S	RED	BLU	BLK	260								
MIL-C-81703 Series II Circular Rack and panel push pull coupling Front release contacts	MS3147	M39029/31-223 or MS3192-20-20A	P	RED	RED	ORN	223	20	20	20 - 24	M22520/1-01 or M22520/2-01	M22520/1-02 (red)	M81969/17-03	M81969/19-06	M81969/19-06
		M39029/32-242 or MS3193-20-20A	S	RED	YEL	RED	242					M22520/2-02			
	ST5M1287 2/							No. 8 coaxial			M22520/5-01	M22520/5-09A			
MIL-C-83723 Series III Bayonet or threaded coupling Rear release contacts	M83723/71 M83723/73 M83723/74 M83723/75 M83723/76 M83723/77 M83723/78 M83723/82 M83723/83 M83723/84 M83723/85 M83723/86 M83723/87 M83723/95 M83723/96 M83725/71	M39029/4-110 or M39029/4-20-20	P	BRN	BRN	BLK	110	20	20	20 - 24	M22520/1-01 or M22520/2-01	M22520/1-02 (red)	DAK83-20 or M81969/14-02 (red end)	DRK83-20 or M81969/14-02 (white end)	M81969/30-05
		M39029/5-115 M39029/5-20-20	S	BRN	BRN	GRN	115					M22520/2-02			
		M39029/4-112 or M39029/4-16-20	P	BRN	BRN	RED	112	16	20		M22520/1-01	M22520/1-02 (blue)	DAK83-16 or M81969/14-03 (blue end)	DRK83-16 or M81969/14-03 (white end)	M81969/30-06
		M39029/5-117 or M39029/5-16-20	S	BRN	BRN	VIO	117								
		M39029/4-111 M39029/4-16-16	P	BRN	BRN	BRN	111	16	16	16 - 20					
		M39029/5-116 M39029/5-16-16	S	BRN	BRN	BLU	116								

See footnotes at end of table.

TABLE IV. F-15 tool selection chart - Continued.

Vendor (code) connector series and type	Basic connector PIN	Contact PIN	Pin or socket	Color bands 1st	Color bands 2nd	Color bands 3rd	Bin code	Contact size: Mating end	Contact size: Wire barrel	Wire range or cable	Crimp tool	Turret head positioner or die set	Installing tool	Removal tool	Removal tool for unwired contacts
MIL-C-83723 (continued) Series III Bayonet or threaded coupling Rear release contacts	M83723/71 M83723/73 M83723/74 M83723/75 M83723/76 M83723/77 M83723/78 M83723/82 M83723/83 M83723/84 M83723/85 M83723/86 M83723/87 M83723/95 M83723/96 M83725/71	M39029/4-114 or M39029/4-12-16	P	BRN	BRN	YEL	114	12	16	16 - 20	M22520/1-01	M22520/1-02 (yellow)	DAK83-12 or M81969/14-04 (yellow end)	DRK83-12 or M81969/14-04 (white end)	M81969/30-07
		M39029/5-119 M39029/5-12-16	S	BRN	BRN	WHT	119								
		M39029/4-113 or M39029/5-12-16	P	BRN	BRN	ORN	113	12	12	12 - 14					
		M39029/5-118 or M39029/5-12-12	S	BRN	BRN	GRA	118								
	ST5M1288 3/							No. 8 triaxial							
	ST5M1289 3/														
	ST5M1017 3/							No. 8 coaxial							
MIL-S-81824 Environmental moisture Resistant splices Raychem splices	M81824/1-1 or D-436-36 D-436-20							Red		20 - 26	M22520/5-01	Y516 (20 - 26)			
	M81824/1-2 or D-436-37 D-436-21							Blue		16 - 20		Y516 (16 - 20)			
	M81824/1-3 or D-436-38 D-436-22							Yellow		12 - 16		Y516 (12 - 16)			
MIL-T-7928	Insulated terminals and splices	MS25036-( ) terminals						Yellow		26 - 24	M22520/5-01	M22520/5-101 (small cavity)			
								Red		22 - 18		M22520/5-100 (small cavity)			
		MS25181-( ) splices						Blue		16 - 14		M22520/5-100 (large cavity)			
								Yellow		12 - 10					

See footnotes at end of table.

TABLE IV. F-15 tool selection chart - Continued.

Vendor (code) connector series and type	Basic connector PIN	Contact PIN	Pin or socket	Color bands 1st	Color bands 2nd	Color bands 3rd	Bin code	Contact size: Mating end	Contact size: Wire barrel	Wire range or cable	Crimp tool	Turret head positioner or die set	Installing tool	Removal tool	Removal tool for unwired contacts
MIL-T-81714 terminal junctions	M81714/1 M81714/2 M81714/3 M81714/4 M81714/5 M81714/6 M81714/7 M81714/8 M81969/9 M81969/11 M81714/12 M81714/15	M39029/1-507 or M39029/1-20-220		GRN	BLK	VIO	507	20	220	22 - 28	M22520/2-01	K127	M81969/8-03 or M81969/14-01 (green end)	M81969/8-04 or M81969/14-01 (white end)	DRK105-15A with DRK105-22M 2 (green probe)
		M39029/1-100 or M39029/1-16-22		BRN	BLK	BLK	100	16	22	22 - 26	M22520/1-01	M22520/1-02 (red)			
		M39029/1-101 or M39029/1-16-20		BRN	BLK	BRN	101	16	20	20 - 24			DAK83-20 or M81969/14-02 (red end)	DRK83-20 or M81969/14-02 (white end)	M81969/30-05
		M39029/1-102 or M39029/1-14-16		BRN	BLK	RED	102	14	16	16 - 20		M22520/1-02 (blue)	DAK83-16 or M81969/14-03 (blue end)	DRK83-16 or M81969/14-03 (white end)	M81969/30-06
		M39029/1-103 or M39029/1-12-12		BRN	BLK	ORN	103	12	12	12 - 14		M22520/1-02 (yellow)	DAK83-12 or M81969/14-04 (yellow end)	DRK83-12 or M81969/14-04 (white end)	M81969/30-07
Department of Defense ON069562 Rear release contacts	"AIMS" series ON089559 ON089560 ON089561	M39029/4-110 or M83723-33820	P	BRN	BRN	BLK	110	20	20	20 - 24	M22520/1-02 or M22520/2-01	M22520/1-02 (red) or M22520/2-02	DAK83-20 or M81969/14-02	DRK83-20 or M81969/14-02	M81969/30-05
		M39029/5-115 M83723-34820	S	BRN	BRN	GRN	115								
		M39029/4-111 or M83723/33816	P	BRN	BRN	BRN	111	16	16	16 - 20	M22520/1-01	M22520/1-02 (blue)	DAK83-16 or M81969/14-03 (blue end)	DRK83-16 or M81969/14-03 (white end)	M81969/30-06
		M39029/5-116 or M83723-34816	S	BRN	BRN	BLU	116								
		ON089558-1	P					8 - 8 shielded		4/	Inner contact M22520/2-01 | M22520/2-24		294-540 or ON089564 (green)	294-541 or ON089565 (white)	ON089565
		ON089558-2	S								Outer ferrule M22520/5-01 | M22520/5-10				
Amphenol Connector Division (02660) Thermocouple front release contacts	Thermocouple contacts for use in amphenol "48" series	48-2247	P					20	20	20 - 24	M22520/1-01 or M22520/2-01	M22520/1-02 (red) or M22520/2-02	M81969/17-09	M81969/19-06	M81969/19-06
		48-2233	S												
		48-2233	P												
		48-2176	S												

See footnotes at end of table.

TABLE IV. F-15 tool selection chart - Continued.

Vendor (code) connector series and type	Basic connector PIN	Contact PIN	Pin or socket	Color bands 1st	Color bands 2nd	Color bands 3rd	Bin code	Contact size: Mating end	Contact size: Wire barrel	Wire range or cable	Crimp tool	Turret head positioner or die set	Installing tool	Removal tool	Removal tool for unwired contacts
Amphenol Canada, Ltd. (03554) Rear release filter contacts	480-16E20-39P Filter pin connector	486-122-20	PP[2]					20	20	20 - 24	M22520/1-01	TH317 (red)	DAX83-20 or M81969/14-02 (red end)	DRX83-20 or M81969/14-02 (white end)	M81969/30-05
		486-51-20	P												
		486-210-16	PP[2]					16	16	16 - 20		TH317 (blue)	DAX83-16 or M81969/14-03 (blue end)	DRX83-16 or M81969/14-03 (white end)	M81969/30-06
		486-51-16	P												
Amphenol-RF (74868) Radio frequency coaxial	"BNC" series 31-4320 Straight plug	M39012/16-10	P							RG58/U	Inner contact M22520/1-01 | M22520/1-13				
		M39012/16-52									Outer ferrule M22520/5-01 | M22520/5-11(A)				
	"BNC" series 31-4481-1000 Right angle plug	M39012/20-11	P							McAir ST5M1010	Inner contact M22520/1-01 | M22520/1-12 (green)				
		31-1357-5									Outer ferrule M22520/5-01 | M22520/5-19(A)				
	"TNC" series 31-3228-1000 Straight plug	M39012/26-10	P							RG142/U RG400/U	Inner contact M22520/1-01 | M22520/1-12 (blue)				
		M39012/26-51									Outer ferrule M22520/5-01 | M22520/5-19(B)				
	"TNC" series 31-3230-2000 Straight plug	M39012/26-11	P							McAir ST5M1010	Inner contact M22520/1-01 | M22520/1-12 (green)				
		31-1357-5									Outer ferrule M22520/5-01 | M22520/5-41(B)				
	"TNC" series 31-4478-1000 Straight plug	M39012/26-11	P								Inner contact M22520/1-01 | M22520/1-12 (blue)				
		31-1357-5									Outer ferrule M22520/5-01 | M22520/5-19(B)				

See footnotes at end of table.

TABLE IV. F-15 tool selection chart - Continued.

Vendor (code) connector series and type	Basic connector PIN	Contact PIN	Pin or socket	Color bands 1st	Color bands 2nd	Color bands 3rd	Bin code	Contact size Mating end	Contact size Wire barrel	Wire range or cable	Crimp tool	Turret head positioner or die set	Installing tool	Removal tool	Removal tool for unwired contacts
Amphenol-RF (74868) Radio frequency coaxial	"TNC" series 31-4509-1 Receptacle	M39012/28-11	S							RG142/U RG400/U	Inner contact M22520/1-01	M22520/1-12 (red)			
		31-1357-5									Outer ferrule M22520/5-01	M22520/5-19(8)			
	"TNC" series 31-3229-1000 Right angle plug	M39012/30-10	P								Inner contact M22520/1-01	M22520/1-12 (green)			
		M39012/30-50									Outer ferrule M22520/5-01	M22520/5-41(8)			
	"TNC" series 31-3231-2000 Right angle plug	M39012/30-11	P							McAir ST5M1010	Inner contact M22520/1-01	M22520/1-12 (green)			
		31-1357-5													
	"TNC" series 31-4230-1000 Right angle plug	M39012/30-11	P							RU180/U McAir ST5M1351	Outer ferrule M22520/5-01	M22520/5-10(8)			
		M39012/30-51													
	"TNC" series 31-4228-2000 Right angle plug	M39012/30-12	P							McAir ST5M1347					
		31-1357-5													
Bendix (077820) Thermocouple Rear release contacts	Thermocouple contacts for use in MIL-C-38999 series II connectors	10-407830-320	P					20	20	20 - 24	M22520/1-01 or M22520/2-01	M22520/1-04 (red) M22520/2-10	M81969/8-05 or M81969/14-02 (red end)	M81969/8-06 or M81969/14-02 (white end)	DRK105-1SA with DRK105-20-2 (red probe)
		10-407831-320	S												
		10-407830-310	P												
		10-407830-310	S												
		10-407830-342	P												
		10-407830-342	S												

See footnotes at end of table.

TABLE IV. F-15 tool selection chart - Continued.

Vendor (code) connector series and type	Basic connector PIN	Contact PIN	Pin or socket	Color bands 1st	Color bands 2nd	Color bands 3rd	Bin code	Contact size Mating end	Contact size Wire barrel	Wire range or cable	Crimp tool	Turret head positioner or die set	Installing tool	Removal tool	Removal tool for unwired contacts
"LJT" series Circular Plug and receptacle Rear release contacts	LJTPS00RT21-79( )	M39029/58-360 or MS27493-220	P	ORN	BLU	BLK	360	22	220	22 - 28	M22520/2-01	M22520/2-09	M81969/8-05 or M81969/14-02 (red end)	M81969/8-06 or M81969/14-02 (white end)	DRK105-1SA with DRK105-22M-2 (yellow probe)
		M39029/56-348 or MS27490-220	S	ORN	YEL	GRA	348					M22520/2-07			
	and LJTPS00GRT21-79( )	21-33102-22	P					8 - 8 coaxial		McAir STR51010 Tenso-lite 28895/2X1	Inner contact M22520/2-01	Inner contact M22520/2-31	Insert by hand	114008 or DRK95-8	
		21-33101-22	S								Outer ferrule M22520/5-01	Outer ferrule M22520/5-41(8)			
	87-488701-*** 87-488704-*** 87-488705-*** 87-488711-*** 87-488713-*** 87-488719-*** 87-488729-*** 87-488739-*** 87-488750-*** 87-488759-*** 87-488770-*** 87-488710-*** 87-488718-*** 87-488728-*** 87-488737-*** 87-488748-*** 87-488757-*** 87-488767-*** 5/	M39029/58-363 or MS27493-20	P	ORN	BLU	ORN	363	20	20	20 - 24	M22520/1-01	M22520/1-04 (red)	M81969/8-05 or M81969/14-02 (red end)	M81969/8-06 or M81969/14-02 (white end)	DRK105-1SA with DRK105-20-2 (red probe)
		M39029/56-351 or MS27490-20	S	ORN	GRN	BRN	351				M22520/2-01	M22520/2-10			
		M39029/58-364 or MS27493-16	P	ORN	BLU	YEL	364	16	16	16 - 18	M22520/1-01	M22520/1-04 (blue)	M81969/8-07 or M81969/14-03 (blue end)	M81969/8-08 or M81969/14-03 (white end)	DRK105-1SA with DRK105-16-2 (blue probe)
		M39029/56-352 or MS27490-16	S	ORN	GRN	RED	352								
	87-488721-*** 87-488738-*** 87-488769-*** 5/	M39029/58-363 or MS27493-20	P	ORN	BLU	ORN	363	20	200	20 - 24	M22520/1-01 or M22520/2-01	M22520/1-04 (red)	M81969/8-05 or M81969/14-02 (red end)	M81969/8-06 or M81969/14-02 (white end)	DRK105-1SA with DRK105-20-2 (red probe)
		M39029/56-351 or MS27490-20	S	ORN	GRN	BRN	351					M22520/2-10			
	87-488727-*** 87-488747-*** 87-488766-*** 5/	M39029/58-365 or MS27493-12	P	ORN	BLU	GRN	365	12	12	12 - 14	M22520/1-01	M22520/1-04 (yellow)	M81969/8-09 or M81969/14-04 (yellow end)	M81969/8-10 or M81969/14-04 (white end)	DRK105-1SA with DRK105-12-2 (yellow probe)
		M39029/56-353 or MS27490-12	S	ORN	GRN	ORN	353								

See footnotes at end of table.

TABLE IV. F-15 tool selection chart - Continued.

Vendor (code) connector series and type	Basic connector PIN	Contact PIN	Pin or socket	Color bands 1st	Color bands 2nd	Color bands 3rd	Bin code	Contact size Mating end	Contact size Wire barrel	Wire range or cable	Crimp tool	Turret head positioner or die set	Installing tool	Removal tool	Removal tool for unwired contacts
MIL-C-38999 Series 1 Lanyard release coupling Rear-release contacts	87-488700-*** 87-488706-*** 87-488714-*** 87-488720-*** 87-488730-*** 87-488740-*** 87-488749-*** 87-488758-*** 87-488768-*** 5/	M39029/58-360 or MS27493-22D	P	ORN	BLU	BLK	360	22	22D	22 - 28	M22520/2-01	M22520/2-09	M81969/8-01	M81969/8-02	DRK105-1SA with DRK105-22M-2 (yellow probe)
		M39029/56-348 or MS27490-22D	S	ORN	YEL	GRA	348					M22520/2-07			
	87-488700-*** 5/	M39029/58-361 or MS27493-22M	P	ORN	BLU	BRN	361	22	22M	24 - 28		M22520/2-09	or	or	
		M39029/56-349 or MS27490-22M	S	ORN	YEL	WHT	349					M22520/2-07			
	91-539700-*** 91-539706-*** 91-539714-*** 91-539720-*** 91-539730-*** 91-539740-*** 91-539749-*** 91-539758-*** 91-539768-*** 5/	M39029/58-360 or MS27493-22D	P	ORN	BLU	BLK	360	22	22D	22 - 28		M22520/2-09	M81969/14-01 (green end)	M81969/14-01 (white end)	
		M39029/56-348 or MS27490-22D	S	ORN	YEL	GRA	348					M22520/2-07			
	91-539712-*** 5/	M39029/57-354 or MS27490-22D		ORN	GRN	YEL	354								
		M39029/57-355 or MS27493-22M	P	ORN	GRN	GRN	355	22	22M	24 - 28		M22520/2-09			

See footnotes at end of table.

TABLE IV. F-15 tool selection chart - Continued.

Vendor (code) connector series and type	Basic connector PIN	Contact PIN	Pin or socket	Color bands 1st	Color bands 2nd	Color bands 3rd	Bin code	Contact size Mating end	Contact size Wire barrel	Wire range or cable	Crimp tool	Turret head positioner or die set	Installing tool	Removal tool	Removal tool for unwired contacts
MIL-C-38999 Series I (continued)	91-539701-*** 91-539704-*** 91-539705-*** 91-539711-*** 91-539713-*** 91-539719-*** 91-539729-*** 91-539739-*** 91-539750-*** 91-539759-*** 91-539770-*** 5/	M39029/58-363 or MS27493-20	P	ORN	BLU	ORN	363	20	20	20 - 24	M22520/1-01 or M22520/2-01	M22520/1-04 (red)	M81969/8-05 or M81969/14-02 (red end)	M81969/8-06 or M81969/14-02 (white end)	DRK105-1SA with DRK105-20-2 (red probe)
		M39029/56-351 or MS27490-20	S	ORN	GRN	BRN	351					M22520/2-10			
	91-539710-*** 91-539718-*** 91-539728-*** 91-539737-*** 91-539748-*** 91-539757-*** 91-539767-*** 5/	M39029/58-364 or MS27493-20	P	ORN	BLU	YEL	364	16	16	16 - 18	M22520/1-01	M22520/1-04 (blue)	M81969/8-07 or M81969/14-03 (blue end)	M81969/8-08 or M81969/14-03 (white end)	DRK105-1SA with DRK105-16-2 (blue probe)
		M39029/56-352 or MS27490-16	S	ORN	GRN	RED	352								
Bendix "LHT" series MIL-C-38999 Series I (Continued)	91-539721-*** 91-539738-*** 91-539769-***	M39029/58-363 or MS27493-20	P	ORN	BLU	ORN	363	20	20	20 - 24	M22520/2-01	M22520/2-10	M81969/8-05 or M81969/14-02 (red end)	M81969/8-06 or M81969/14-02 (white end)	DRK105-1SA with DRK105-20-2 (red probe)
		M39029/56-351 or MS27490-20	S	ORN	GRN	BRN	351								
		M39029/58-364 or MS27493-16	P	ORN	BLU	YEL	364	16	16	16 - 18	M22520/1-01	M22520/1-04 (blue)	M81969/8-07 or M81969/14-03 (blue end)	M81969/8-08 or M81969/14-03 (white end)	DRK105-1SA with DRK105-16-2 (blue probe)
		M39029/59-352 or MS27490-16	S	ORN	GRN	RED	352								
	91-539727-*** 91-539747-*** 91-539766-*** 5/	M39029/58-365 or MS27490-12	P	ORN	BLU	GRN	365	12	12	12 - 14		M22520/1-04 (yellow)	M81969/8-09 or M81969/14-04 (yellow end)	M81969/8-10 or M81969/14-04 (white end)	DRK105-1SA with DRK105-12-2 (yellow probe)
		M39029/56-353 or MS27490-12	S	ORN	GRN	ORN	353								

See footnotes at end of table.

TABLE IV. F-15 tool selection chart - Continued.

Vendor (code) connector series and type	Basic connector PIN	Contact PIN	Pin or socket	Color bands 1st	Color bands 2nd	Color bands 3rd	Bin code	Contact size: Mating end	Contact size: Wire barrel	Wire range or cable	Crimp tool	Turret head positioner or die set	Installing tool	Removal tool	Removal tool for unwired contacts
MIL-C-38999 Series II Lanyard release coupling Rear-release contacts	91-540446-35() 91-540447-35() 91-540448-35() 91-540449-35() 91-540450-35() 91-540451-35() 91-540452-35() 91-540453-35() 91-540454-35()	M39029/58-360 MS27493-22D	P	ORN	BLU	BLK	360	22	22D	22 - 28	M22520/2-01	M22520/2-09	M81969/8-01 or M81969/14-01 (green end)	M81969/8-02 or M81969/14-01 (white end)	DRK105-1SA with DRK105-22M-2 (yellow probe)
		M39029/57-354 MS27491-22D	S	ORN	GRN	YEL	354					M22520/2-06			
	91-540448-22()	M39029/58-361 MS27493-22M	P	ORN	BLU	BRN	361	22	22M	24 - 28		M22520/2-09			
		M39029/57-355 MS27491-22M	S	ORN	GRN	GRN	355					M22520/2-06			
	91-540446-98() 91-540447-6() 91-540448-8() 91-540448-98() 91-540449-19() 91-540450-26() 91-540451-32() 91-540452-41() 91-540453-55() 91-540454-61()	M39029/58-363 MS27493-20	P	ORN	BLU	ORN	363	20	20	20 - 24		M22520/2-10	M81969/8-05 or M81969/14-02 (red end)	M81969/8-06 or M81969/14-02 (white end)	DRK105-1SA with DRK105-20-2 (red probe)
		M39029/57-357 MS27491-20	S	ORN	GRN	VIO	357								
	91-540448-4() 91-540449-5() 91-540450-8() 91-540541-11() 91-540452-16() 91-540453-21()	M39029/58-364 MS27493-16	P	ORN	BLU	YEL	364	16	16	16 - 20	M22520/1-01	M22520/1-04	M81969/8-07 or M81969/14-03 (blue end)	M81969/8-08 or M81969/14-03 (white end)	DRK105-1SA with DRK105-16-2 (blue probe)
		M39029/57-358 MS27491-16	S	ORN	GRN	GRA	358								
	91-540449-97() 91-540451-28() 91-540452-39() 91-540454-4()	M39029/58-363 MS27493-20	P	ORN	BLU	ORN	363	20	20	20 - 24	M22520/2-01	M22520/2-10	M81969/8-05 or M81969/14-02 (red end)	M81969/8-06 or M81969/14-02 (white end)	DRK105-1SA with DRK105-20-2 (red probe)
		M39029/57-357 MS27491-20	S	ORN	GRN	VIO	357								

See footnotes at end of table.

TABLE IV. F-15 tool selection chart - Continued.

Vendor (code) connector series and type	Basic connector PIN	Contact PIN	Pin or socket	Color bands 1st	Color bands 2nd	Color bands 3rd	Bin code	Contact size: Mating end	Contact size: Wire barrel	Wire range or cable	Crimp tool	Turret head positioner or die set	Installing tool	Removal tool	Removal tool for unwired contacts
Bendix "LJT" series MIL-C-38999 Series II (continued)	91-540445-4() 91-540449-5() 91-540450-8() 91-540541-11() 91-540452-16() 91-540453-21()	M39029/58-364 MS27493-16	P	ORN	BLU	YEL	364	16	16	16 - 20	M22520/1-01	M22520/1-04 (blue)	M81969/8-07 or M81969/14-03 (blue end)	M81969/8-08 or M81969/14-03 (white end)	DRK105-1SA with DRK105-16-2 (blue probe)
		M39029/57-358 MS27491-16	S	ORN	GRN	GRA	358								
	91-540450-6()	M39029/58-365 MS27493-12	P	ORN	BLU	GRN	365	12	12	12 - 14		M22520/1-04 (yellow)	M81969/8-09 or M81969/14-03 (yellow end)	M81969/8-10 or M81969/14-04 (white end)	DRK105-1SA with DRK105-12-2 (yellow probe)
		M39029/57-359 MS27491-12	S	ORN	GRN	WHT	359								
	91-540454-24()	M39029/58-364 MS27493-16	P	ORN	BLU	YEL	364	16	16	16 - 20		M22520/1-04 (blue)	M81969/8-07 or M81969/14-03 (blue end)	M81969/8-08 or M81969/14-03 (white end)	DRK105-1SA with DRK105-16-2 (blue probe)
		M39029/57-358 MS27491-16	S	ORN	GRN	GRA	358								
		M39029/58-365 MS27493-12	P	ORN	BLU	GRN	365	12	12	12 - 14		M22520/1-04 (yellow)	M81969/8-09 or M81969/14-04 (yellow end)	M11969/8-10 or M81969/14-01 (white end)	DRK105-1SA with DRK105-12-2 (yellow probe)
		M39029/57-359 MS27491-12	S	ORN	GRN	WHT	359								
"SJT" series Circular Rear release contacts	SJTPOORT-18 -35P	M39029/58-360 MS27493-22D	P	ORN	BLU	BLK	360	22	22D	22 - 28	M22520/2-01	M22520/2-09	M81969/8-01 or M81969/14-01 (green end)	M81969/8-02 or M81969/14-01 (white end)	DRK105-1SA with DRK105-22M-2 (yellow probe)
	91-496296-18 -35S	M39029/56-348 MS27490-22D	S	ORN	YEL	GRA	348					M22520/2-07			
Bendix Microwave (95712) "BNC" series Bayonet coupling RF-coaxial	33819-11 ST5M1426A0001									McAir ST5M1284 -001	Inner contact				
											Solder				
	33819-12 ST5M1426A002										Outer ferrule				
	33819-13 ST5M1426A0003										M22520/5-01	M22520/5-05(A)			

See footnotes at end of table.

TABLE IV. F-15 tool selection chart - Continued.

Vendor (code) connector series and type	Basic connector PIN	Contact PIN	Pin or socket	Color bands 1st	Color bands 2nd	Color bands 3rd	Bin code	Contact size: Mating end	Contact size: Wire barrel	Wire range or cable	Crimp tool	Turret head positioner or die set	Installing tool	Removal tool	Removal tool for unwired contacts
Bendix Microwave (95712) "TNC" series Threaded coupling RF-coaxial	33821-2 ST5M142501R		ST PLG							RG108/U McAir ST5M1298 -20S256	Inner contact				
	33449-3 ST5M142501S										Solder				
	33449-4 ST5M142502S										Outer ferrule				
	33449-5 ST5M142503S										M22520/5-01	M22520/5-19(A)			
	33821-11 ST5M1425A01R		PLG					Twinax		McAir ST5M1284 -001	Inner contact				
	33449-12 ST5M1425A01S										Solder				
	33821-12 ST5M1425A02R														
	33449-13 ST5M1425A02S										Outer ferrule				
	33821-13 ST5M1425A03R														
	33449-14 ST5M1425A03S										M22520/5-01	M22520/5-05(A)			
Burndy (39927) Thermocouple Rear release contacts	Thermocouple contacts for use in MIL-C-38999 Series II connectors	TM20W-9						20	20	20 - 24	M22520/1-01 or M22520/2-01	M22520/1-04 (red)	M81969/8-05 or M81969/14-02 (red end)	M81969/8-06 or M81969/14-02 (white end)	DRK105-1SA with DRK105-20-2 (red probe)
		TC20W-9													
		TM20W-10													
		TC20W-10										M22520/2-10			
		TM20W-12													
		TC20W-12													

See footnotes at end of table.

TABLE IV. F-15 tool selection chart - Continued.

Vendor (code) connector series and type	Basic connector PIN	Contact PIN	Pin or socket	Color bands 1st	Color bands 2nd	Color bands 3rd	Bin code	Contact size: Mating end	Contact size: Wire barrel	Wire range or cable	Crimp tool	Turret head positioner or die set	Installing tool	Removal tool	Removal tool for unwired contacts
Hylen Bantam series Circular front release contacts	M22T10X()6() -H25	CPP#: 1, 2, 3, 4 6/	P					8 - 8 coaxial		Cable group B 7/	Inner contact M22520/2-01	CPP#: 2, 6 K413			
		CPP#: 3, 4, 5, 6 6/	S								Outer ferrule M22520/5-01	CPP#: 3 M22520/5-05(B)			
	M22TR10X()6() -H33	CPP#: 2, 7, 8, 9 6/	P							Cable group C 8/	Inner contact M22520/2-01	CPP#: 2, 6 K413			
		CPP#: 6, 8, 9, 10 6/	S								Outer ferrule M22520/5-01	Y248			
	M22TR10X()6() -H68	CPP#: 1, 2, 3, 4 6/	P							Cable group B 7/	Inner contact M22520/2-01	CPP#: 2, 6 K413			
		CPP#: 3, 4, 5, 6 6/	S								Outer ferrule M22520/5-01	CPP#: 3 M22520/5-05(B)			
		CPP#: 2, 7, 8, 9 6/	P							Cable group C 8/	Inner contact M22520/2-01	CPP#: 2, 6 K413			
		CPP#: 6, 8, 9, 10 6/	S								Outer ferrule M22520/5-01	Y248			
Smooth Bantam series Circular Front release contacts	L18T()88() Power and triaxial L22T()96() Triaxial only	M39029/31-240 or MS3192A20-20A	P	RED	YEL	BLK	240	20	20	20 - 24	M22520/1-01 or M22520/2-01	M22520/1-02 (red)	M81969/17-09	M81969/19-10	M81969/19-10
		M39029/32-259 MS3193A20-20A	S	RED	GRN	WHT	259					M22520/2-02			

See footnotes at end of table.

TABLE IV. F-15 tool selection chart - Continued.

Vendor (code) connector series and type	Basic connector PIN	Contact PIN	Pin or socket	Color bands 1st	Color bands 2nd	Color bands 3rd	Bin code	Contact size Mating end	Contact size Wire barrel	Wire range or cable	Crimp tool	Turret head positioner or die set	Installing tool	Removal tool	Removal tool for unwired contacts
Smooth Bantee series Circular front release contacts (continued)	L18T()88() Power and triaxial L22T()96() Triaxial only	LRMXSK-19	P					8 - 8 coaxial		Cable group D 9/	Inner contact M22520/2-01	Inner contact K160	DAK87-8	DRK87-8	DRK87-8
		LRCXSK-19	S								Inner ferrule M22520/1-01	Inner ferrule TP120			
											Outer ferrule M22520/5-01	Outer ferrule M22520/5-45(A)			
		Amphenol 902-5020 STSM1290-001P	P								Inner contact M22520/5-01	Inner contact Y308S(C)			
		Amphenol 902-5019 STSM1290-001S	S								Inner ferrule M22520/5-01	Inner ferrule Y308S(B)			
											Outer ferrule M22520/5-01	Outer ferrule Y308S(A)			
Deutsch relay (99699) Relay socket modules Rear release contacts	BSCT0210-8 BSCT0210-9 BSCVSTD410-11 BSE410-6 BSE410-7	M39029/57-358 or MS27491-16	S	ORN	GRN	GRA	358	16	16	16 - 20	M22520/1-01	M22520/1-04 (blue)	M81969/8-07 or M81969/14-03 (blue end)	M81969/8-08 or M81969/14-03 (white end)	DRK105-1SA with DRK105-16-2 (blue probe)
	BSCVS110-1 BSCVS110-2 BSCVS210-1 BSE210-6 BSE210-7	M39028/57-356 or MS27491-22	S	ORN	GRN	BLU	356	22	22	22 - 26	M22520/2-01	M22520/2-06	M81969/8-03 or M81969/14-01 (green end)	M81969/8-04 or M81969/14-01 (white end)	DRK105-1SA with DRK105-22-2 (green probe)
		M39029/57-358 or MS27491-16		ORN	GRN	GRA	358	16	16	16 - 20	M22520/1-01	M22520/1-04 (blue)	M81969/8-07 or M81969/14-03 (blue end)	M81969/8-08 or M81969/14-03 (white end)	DRK105-1SA with DRK105-16-2 (blue probe)

See footnotes at end of table.

TABLE IV. F-15 tool selection chart - Continued.

Vendor (code) connector series and type	Basic connector PIN	Contact PIN	Pin or socket	Color bands 1st	Color bands 2nd	Color bands 3rd	Bin code	Contact size: Mating end	Contact size: Wire barrel	Wire range or cable	Crimp tool	Turret head positioner or die set	Installing tool	Removal tool	Removal tool for unwired contacts
Duetsch relay (99699) Relay socket modules Rear release contacts (continued)	BSEL410-1	M39029/57-357 or MS27491-16	S	ORN	GRN	VIO	357	20	20	20 - 24	M22520/1-01 or M22520/2-01	M22520/1-04 (red) / M22520/2-10	M81969/8-05 or M81969/14-02 (red end)	M81969/8-06 or M81969/14-02 (white end)	DRK105-1SA with DRK105-20-2 (red probe)
		M39029/57-358 or MS27491-16		ORN	GRN	GRA	358	16	16	16 - 20	M22520/1-01	M22520/1-04 (blue)	M81969/8-07 or M81969/14-03 (blue end)	M81969/8-08 or M81969/14-03 (white end)	DRK105-1SA with DRK105-16-2 (blue probe)
Deutsch (11139) "DS" series Circular Push-pull coupling Front release contacts	DS07-37-19() and DS07-61-21() Coaxial contacts only	800-20/31-1	P					20	20	20 - 24	M22520/1-01	TH18 (red)	DAK51-20	DRK51-20	DRK51-20
		800-20/30-1	S												
		0106-003-000	P					8 - 8 coaxial		RG174/U RG178/U RG179/U RG187/U RG188/U RF196/U	Inner contact: M22520/2-01	Inner contact: K30C	DAK51-8	DRK51-8	DRK51-8
		0107-003-000	S								Outer ferrule: M22520/5-01	Outer ferrule: M22520/5-03(A)			
	DS07-37-19()-1 and DS07-61-21()-1 Coaxial contacts only	800-20/32-1	P					20	20	20 - 24	M22520/1-01	TH18 (red)	DAK51-20	DRK51-20	DRK51-20
		800-20/30-1	S												
		800/33-1	P					8 - 8 coaxial		RG180/U RG195/U	Inner contact: M22520/2-01	Inner contact: K30C	DAK51-8	DRK51-8	DRK51 8
		800/34-1	S								Outer ferrule: M22520/5-01	Outer ferrule: M39029/5-05(B)			
	DS07-37-19()-5 and DS07-61-20()-5 Coaxial contacts only	800-20/32-1	P					20	20	20 - 24	M22520/1-01	TH18 (red)	DAK51-20	DRK51-20	DRK51-20
		800-20/30-1	S												
		0106-003-000	P					8 - 8 coaxial		RG55/U RG58/U RG141/U RG142/U RG223/U	Inner contact: M22520/2-01	Inner contact: K30C	DAK51-8	DRK51-8	DRK51-8
		0107-003-000	S								Outer ferrule: M22520/5-01	Outer ferrule: M22520/5-05(A)			

See footnotes at end of table.

TABLE IV. F-15 tool selection chart - Continued.

Vendor (code) connector series and type	Basic connector PIN	Contact PIN	Pin or socket	Color bands 1st	Color bands 2nd	Color bands 3rd	Bin code	Contact size: Mating end	Contact size: Wire barrel	Wire range or cable	Crimp tool	Turret head positioner or die set	Installing tool	Removal tool	Removal tool for unwired contacts
Deutsch (11139) "DS" series Circular Push-pull coupling Front release contacts	DS07-37-19()-15 and DS07-61-21()-15 Coaxial contacts only	800-20/32-1	P					20	20	20 - 24	M22520/1-01	DAK51-20	DRK51-20	DRK51-20	DRK51-20
		800-20/30-1	S												
		800-12/32-2	P					12	12	12 - 14		TH18 (yellow)	M81969/17-05	DRK51-12	DRK51-12
		800-12/30-2	S												
		10926-56	P					8 - 8 coaxial		McAir STSM1010	Inner contact: M22520/2-01	Inner contact: K30C	DAK51-8	DRK51-8	DRK51-8
		109267-56	S								Outer ferrule: M22520/5-01	Outer ferrule: M39029/5-43(B)			
	DS07-37-19()-16 and DS07-61-21()-16 Coaxial contacts only	800-20/32-1	P					20	20	20 - 24	M22520/1-01	TH18 (red)	DAK51-20	DRK51-20	DRK51-20
		800-20/30-1	S												
		800/33-1	P					8 - 8 coaxial		RG18/U McAir STSM1347	Inner contact: M22520/2-01	Inner contact: K30C	DAK51-8	DRK51-8	DRK51-8
		800/34-1	S								Outer ferrule: M22520/5-01	Outer ferrule: M22520/5-05(B)			
"D+SM" series Rectangular friction coupling Front release	D+SM-()	031-0932-004	P					20	20	20 - 24	M22520/1-01	M22520/1-02 (red)	M81969/8-05	DRK36	DRK36
		031-0931-006	S												
"73***" series Circular Push pull coupling Rear release	73043-12-14S004	2841-5-9000	P					22	22	22 - 26	M22520/2-01	K127	M15570-22-1 (yellow end)	DRK229 or M15570-22-1 (white end)	
		2803-4-0000	S												

See footnotes at end of table.

TABLE IV. F-15 tool selection chart - Continued.

Vendor (code) connector series and type	Basic connector PIN	Contact PIN	Pin or socket	Color bands 1st	Color bands 2nd	Color bands 3rd	Bin code	Contact size: Mating end	Contact size: Wire barrel	Wire range or cable	Crimp tool	Turret head positioner or die set	Installing tool	Removal tool	Removal tool for unwired contacts
ITT Cannon (71468) Circular Threaded coupling Rear release contacts		030-3196-015	P					16	16	16 - 20	M22520/1-01	M22520/1-02 (blue)	DAK83-16 or M81969/14-03 (blue end)	DRK83-16 or M81969/14-03 (white end)	M81969/30-06
		031-3114-014	S												
		031-3113-011						16S	16S						
		030-3196-016	P					16	16						
		031-3114-015	S												
		031-3133-012						16S	16S						
		030-3197-011	P					12	12	12 - 14		M22520/1-02 (yellow)	DAK83-12 or M81969/14-04 (yellow end)	DRK83-12 or M81969/14-04 (white end)	M81969/30-07
		031-3115-009	S												
		030-3197-012	P												
		031-3115-012	S												
ST5M1361 ST5M1362	22507 22508	22507-19	P							McAir ST5M1323 times AA2325		TP545			
		22508-20	S												
ITT Gremar (91737)	"BNC" series 26114()	M39012/20-11	P							McAir ST5M1010	Inner contact: M22520/1-01	Inner contact: M22520/1-12 (green)			
		27162-43									Outer ferrule: M22520/5-01	Outer ferrule: M22520/5-19(B)			
Radio frequency coaxial	"N" series 26116()	M39012/5-10	P							McAir ST5M1339 -001	Inner contact: M22520/1-01	Inner contact: M22520/1-13 (blue)			
		M39012/5-50	S								Outer ferrule: M22520/5-01	Outer ferrule: M22520/5-61			

See footnotes at end of table.

TABLE IV. F-15 tool selection chart - Continued.

Vendor (code) connector series and type	Basic connector PIN	Contact PIN	Pin or socket	Color bands 1st	Color bands 2nd	Color bands 3rd	Bin code	Contact size Mating end	Contact size Wire barrel	Wire range or cable	Crimp tool	Turret head positioner or die set	Installing tool	Removal tool	Removal tool for unwired contacts
ITT Gremar Radio frequency coaxial (continued)	"TNC" series 27162()	M39012/26-11	P							McAir ST5M1010	Inner contact				
											M22520/1-01	M22520/1-12			
		27162-43									Outer ferrule				
											M22520/5-01	M22520/5-19(A)			
	"TNC" series 27164()	M39012/26-10	P							RG142/U RG400/U	Inner contact				
		M39012/26-51									M22520/1-01	M22520/1-12			
	"TNC" series 27165()	M39012/30-10	P								Outer ferrule				
		M39012/30-50									M22520/5-01	M22520/5-19(B)			
	"TNC" series 27166()	M39012/26-11	P							McAir ST5M1010	Inner contact				
											M22520/1-01	M22520/1-12			
		27162-43									Outer ferrule				
											M22520/5-01	M22520/5-19(A)			
	"TNC" series McAir ST5M1348TR00	M39012/30-11	P							McAir ST5M1010	Inner contact				
		27162-43									M22520/1-01	M22520/1-12			
		M39012/30-12	P							McAir ST5M1347	Outer ferrule				
		27162-43									M22520/5-01	M22520/5-19(B)			
	"TNC" series McAir ST5M1348TR0E	M39012/30-11	P							RG180/U McAir ST5M1351	Inner contact				
		M39012/30-51									M22520/1-01	M22520/1-12			
											Outer ferrule				
											M22520/5-01	M22520/5-09(A)			

See footnotes at end of table.

TABLE IV. F-15 tool selection chart - Continued.

Vendor (code) connector series and type	Basic connector PIN	Contact PIN	Pin or socket	Color bands			Bin code	Contact size		Wire range or cable	Crimp tool	Turret head positioner or die set	Installing tool	Removal tool	Removal tool for unwired contacts
				1st	2nd	3rd		Mating end	Wire barrel						
Solitron (95077) "TNC" series RF-coaxial	"TNC" series McAir ST5M1348TR0E		RT angle plug							ST5M1398 -001	Inner contact				
											Solder				
											Outer ferrule				
											M22520/5-01	M22520/5-37(A)			
Thomas and Betts (59730) High temperature Non-insulated	MV() 675() 5M728-1 through 5M728-19									22 - 18	M22520/5-01	Y622			
										16 - 14					
										12 - 10					

1/ Cable group A: RG161/U, RG174/U, RG179/U, RG187/U, and RG188/U.
2/ Refer to Deutsch "DS" series for contact and tooling information.
3/ Refer to Burndy "Hyfen Bantam" series for contact and tooling information.
4/ Cable group A: RG180/U, RG195/U, twisted pair (sizes 24 and 26): See specification MIL-C-22520/11 for assembly instructions.
5/ (###) suffix code: First two digits represent lanyard length, third digit represents contact style and connector key position. Codes P, E, R, W, or Y represent pin contacts. Codes S, F, T, K, or Z represent socket contacts.
6/ CPP (contact piece part): 1-RWXX110-9, 2-RFW26W-1, 3-YOC110, 4-YOWX110-2, 5-RCXX110-9, 6-RWW26W-1, 7-RWXX128-4, 8-YOC126, 9-RWXX128-4P2, 10-RCXX128-4.
7/ Cable group B: G RG180/U, RG195/U, amphenol 21-597, suprenant 4029 and 9872.
8/ Cable group C: Suprenant EAB-73J-CAA.
9/ Cable group D: McAir ST5M1323-001, times AA2525, tensolite 26895/15X-1.

REQUIREMENTS:

Design and construction: See figures 1 through 6.

Material:

Case (category 2): Fiberglass with an aluminum frame. Color shall be olive drab in accordance with FED-STD-595.

Cover and components: Aluminum alloy, clear anodized in accordance with MIL-A-8625.

Instruction sheets and contents charts: White vinyl .020 inch (0.51 mm) thick.

Insert and retainer pad: Fire retardant foamed polyethylene in accordance with PPP-C-1752, color is optional.

Clasps, handles, and locking hasp: Suitable plating to resist corrosion.

Nameplate: In accordance with MIL-P-19834.

Cover: A retainer pad shall be permanently affixed to the underside with a contents chart insert. A latching mechanism shall be provided so that the tools will be captivated in their respective positions when the cover is closed.

Manual air pressure relief valve: Located adjacent to handle. Decal reading "Open before air flight, close after air flight" shall be attached to the case adjacent to the valve. Optionally, an automatic air pressure relief valve adjacent to the handle. Decal, in this case, shall read "Relief valve automatic, two way, press button to equalize pressure" shall be attached to the case adjacent to the valve.

Rubber feet: Provided on the back and bottom of case (see figure 1).

Marking: M83521/1-XX centered on the inside of top and bottom tool case flyleaf.

Contents charts (see figures 7, 8, 9, and 10): Charts showing the insert cavity configurations and respective tool PIN's.

Tool instruction sheets (see figures 11 through 39): Legible printed instruction sheets detailing the procedure for the assembly, operation, maintenance, and use of the tool contained in the kit.

Tool selection chart: See table IV.

Cross-reference of PIN's to national stock numbers (NSN's); See table V.

Warning label: Label stating "Foreign object damage (FOD) can abort a mission or cause a loss of life. Make sure all tools are accounted for after using this kit" shall be prominently displayed as part of the kit.

Part or Identifying Number (PIN):

M83521/1-XX - Maintenance kit for F-15 aircraft.
M83521/1-XY - Maintenance case assembly.

TABLE V. Cross-reference of PIN's to NSN's with applicable CAGE.

PIN	National stock number (NSN)	CAGE code	PIN	National stock number (NSN)	CAGE code
Crimping tools			Die sets		
M22520/1-01	5120-00-165-3912	81349	M22520/5-03	5120-00-133-0534	81349
M22520/2-01	5120-00-165-3910	81349	M22520/5-05	5120-00-133-0534	81349
M22520/5-01	5120-00-132-6913	81349	M22520/5-09	5120-01-160-1312	81349
M22520/31-01	—	—	M22520/5-10	5120-00-133-0583	81349
46673	5120-00-084-4434	00779	M22520/5-11	5120-01-184-0131	81349
46988	5120-00-857-0879	00779	M22520/5-19	5120-00-116-3159	81349
59461	—	00779	M22520/5-25	5120-00-133-0622	81349
69524-1	—	00779	M22520/5-35	5120-00-116-3156	81349
MBND	5120-00-767-9133	09922	M22520/5-37	5120-00-116-3136	81349
Positioners			M22520/5-41	5120-00-116-3125	81349
M22520/2-02	5120-00-165-3913	81349	M22520/5-43	5120-00-116-3106	81349
M22520/2-03	5120-00-016-7657	81349	M22520/5-45	5120-00-116-3088	81349
M22520/2-06	5120-00-017-3809	81349	M22520/5-61	5120-00-116-3004	81349
M22520/2-07	5120-00-017-3827	81349	M22520/5-100	5120-00-126-0860	81349
M22520/2-08	5120-00-017-3921	81349	M22520/5-101	5120-00-081-4213	81349
M22520/2-09	5120-00-017-3927	81349	Y248	5120-01-037-4757	11851
M22520/2-10	5120-00-017-3932	81349	Y308S	5120-01-266-1946	11851
M22520/2-24	5120-00-132-6928	81349	Y622	—	11851
M22520/2-31	—	—	45061-3	5120-00-856-9959	00779
M22520/2-33	5120-01-313-9953	81349	45062-3	5120-00-857-0032	00779
M22520/2-34	5120-00-117-4706	81349	45063-3	5120-00-117-4563	00779
M22520/31-02	—	—	45064-3	5120-00-010-5082	00779
K300	5120-01-313-9006	11851	45065-3	5120-00-864-1573	00779
K127	5120-00-004-9987	11851	45066-3	5120-00-857-0035	00779
K160	5120-01-037-1381	11851	45158-2	5120-00-864-1574	00779
K413	5120-00-037-1383	11851	45238-2	5120-00-898-6962	00779

TABLE V. Cross-reference of PIN's to NSN's with applicable CAGE - Continued.

PIN	National stock no. (NSN)	CAGE code	PIN	National stock no. (NSN)	CAGE code
Die sets			Removal tools		
45239-2	5120-00898-6963	00779	M81969/8-04	5120-00-146-6557	81349
45240-2	5120-00-864-1575	00779	M81969/8-08	5120-00-177-6966	81349
45241-2	5120-00-587-0037	00779	M81969/8-10	5120-00-103-9708	81349
N22RVMT9	5120-01-055-7341	09922	M81969/17-09	5120-00-146-6193	81349
Installing tools			M81969/17-11	5120-00-406-6546	81349
M81969/2-01	5120-00-177-7028	81349	DRK36	5120-00-224-2824	11851
M81969/8-01	5120-00-251-9503	81349	DRK51-8	5120-00-756-5559	11851
M81969/8-03	5120-00-137-9140	81349	DRK51-12	5120-00-987-7234	11851
M81969/8-05	5120-00-177-6967	81349	DRK51-20	5120-00-171-1568	11851
M81969/8-07	5120-00-018-0529	81349	DRK83-12	5120-01-116-6115	11851
M81969/8-09	5120-00-018-0531	81349	DRK83-16	5120-01-116-6114	11851
M81969/17-03	5120-00-079-4598	81349	DRK83-20	5120-01-116-6116	11851
M81969/17-04	5120-00-079-4599	81349	DRK105	5120-01-107-5891	11851
M81969/17-05	5120-00-079-4600	81349	DRK110	5120-00-104-4066	11851
DAK51-8	5120-00-941-0683	11851	DRK114-12	—	11851
DAK51-20	—	11851	DRK229	—	11851
DAK83-12	5120-01-223-7526	11851	114008	—	11139
DAK83-16	5120-01-223-8428	11851	Insertion/removal tools		
DAK83-20	5120-01-223-7527	11851	M15570-22-1	5120-00-757-7653	11139
DAK87-8	5120-00-133-0030	11851	M81969/14-01	5120-00-018-0575	81349
DAK316	—	11851	M81969/14-02	5120-00-915-4587	81349
ONON89564	5120-00-941-0683	11851	M81969/14-03	5120-00-915-4588	81349
Removal tools			M81969/14-04	5120-00-157-3138	81349
M81969/3-01	5120-00-177-7029	81349	M81969/19-10	5120-01-305-0029	81349
M81969/3-05	5120-00-177-7095	81349	M81969/39-01	5120-00-132-0396	81349
M81969/8-02	5120-00-146-6558	81349			

TABLE V. Cross-reference of PIN's to NSN's with applicable CAGE - Continued.

PIN	National stock number (NSN)	CAGE code	PIN	National stock number (NSN)	CAGE code
Gauges			Blades		
M22520/XX-XX	—	—	45-1633-1	5110-01-039-4014	30119
M22520/3-01	5220-00-165-7604	11851	45-1654-1	5110-01-159-2275	30119
CG12	5220-01-116-3020	11851	L-5210	5110-00-115-2356	30119
CG16	5220-01-116-3020	11851	L-5211	5110-00-115-2358	30119
CG20	5220-01-116-3022	11851	L-5559	5110-01-075-0761	30119
CG22	5220-01-116-3023	11851	Turret heads		
Wire strippers			M22520/1-02	5120-00-016-6382	81349
45-162	5110-01-213-4464	30119	M22520/1-04	5120-00-016-7582	81349
45-163	5110-01-232-4239	30119	M22520/1-13	5120-01-036-9220	81349
45-164	5110-01-218-5828	30119	M22520/1-14	5120-01-036-9222	81349
45-165	5110-01-289-0343	30119	TH18	5120-00-017-6419	11851
45-170	5110-01-250-0480	30119	TH317	5120-01-037-1409	11851
45-171	5110-01-168-7087	30119	Single position heads		
45-176	5110-01-177-7285	30119	TP120	5120-01-037-0472	11851
45-1609	—	30119	TP545	—	11851
45-1633	5110-00-126-0804	30119	M22520/4-15	5120-01-036-9223	81349
45-1654	5110-00-177-7286	30119	Pullers		
R-700	—	—	MT0001	—	11851
R-720(6MIL)	—	—	MT0002	—	11851
R-720(8MIL)	—	—	MT0003	—	11851
Blades			Miscellaneous		
R-701	—	—	Handbook	—	—
R-720(6MIL)	—	—	9/16 hex wrench	—	08929
R-721(6MIL)	—	—	MS90387-2	5120-00-937-5438	96906
R-721(8MIL)	—	—	H03-82	5120-01-037-1407	11851
45-1609-1	—	—	59500	5120-00-827-0197	00779

CONCLUDING MATERIAL

Review activities:
Air Force - 11, 12, 99

User activities:
Air Force - 19, 80

Preparing activity:
Air Force - 85

Agent:
DLA - ES

(Project 5935-F447)