MILITARY SPECIFICATION SHEET

MAINTENANCE KIT, ELECTRICAL CONNECTORS, CONTACTS, AND CONNECTOR AND CABLE ACCESSORIES: MAINTENANCE KIT FOR GENERAL PURPOSE USE

This specification is approved for use by all Departments and Agencies of the Department of Defense.

The requirements for acquiring the maintenance kit described herein shall consist of this specification and the latest issue of MIL-M-83521.

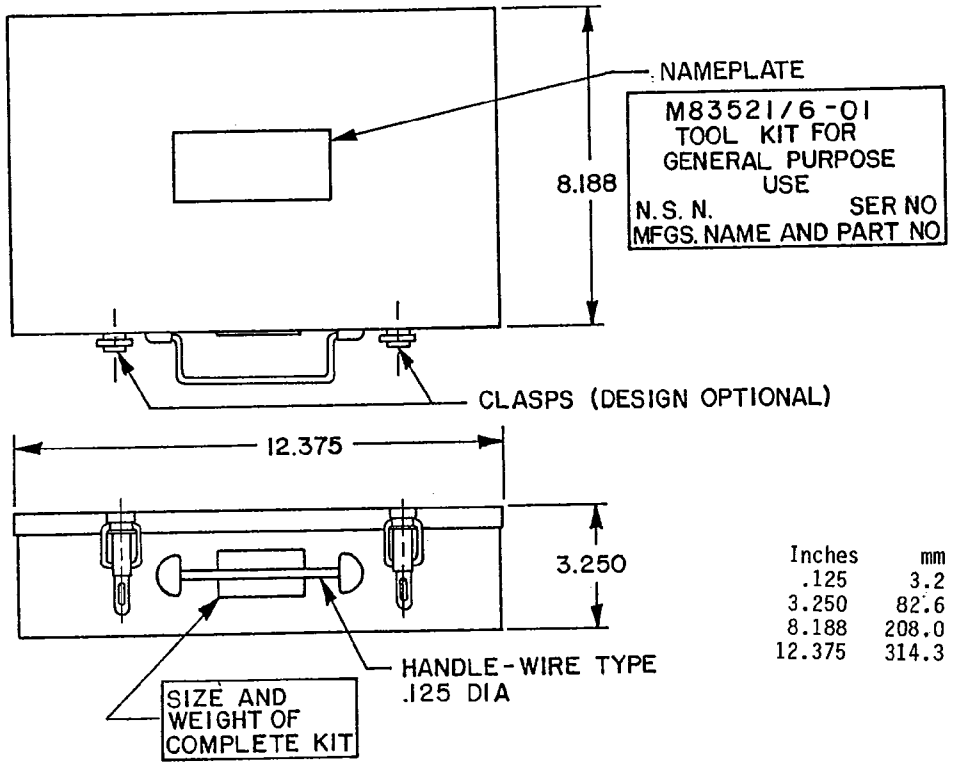

Inches	mm
.125	3.2
3.250	82.6
8.188	208.0
12.375	314.3

NOTES:
1. Dimensions are in inches.
2. Metric equivalents are given for general information only.
3. Unless otherwise specified, tolerance is ±.031 (0.79 mm).
4. Remove all burrs, break sharp edges and corners.
5. Part number M83521/6-01 includes case and tools.

FIGURE 1. Maintenance kit for general purpose use.

DISTRIBUTION STATEMENT A. Approved for public release; distribution is unlimited.

Parts list:

(1)	M83521/6-02	-Tool case assembly.
(1)	M22520/1-01	-Crimp tool frame.
(1)	M22520/1-02	-Turret head.
(1)	M22520/1-05	-Universal head.
(1)	M22520/2-01	-Crimp tool frame.
(1)	M22520/2-02	-Positioner.
(1)	M22520/2-03	-Positioner.
(1)	M22520/3-1	-In-service inspection gage.
(1)	74008	-Hex wrench. (Allen) FSCM 70276.
(1)	45-174	-Wire stripper, hand, 16-26 AWG (or approved equivalent), (Ideal).
(1)	M81969/17-05	-Installing tool.
(1)	M81969/17-04	-Installing tool.
(1)	M81969/17-03	-Installing tool.
(1)	M81969/19-09	-Removal tool.
(1)	M81969/19-11	-Removal tool.
(1)	M81969/19-10	-Removal tool.
(1 Set)	Contents charts, instruction sheets, and tool selection chart.	

FIGURE 1. Maintenance kit for general purpose use - Continued.

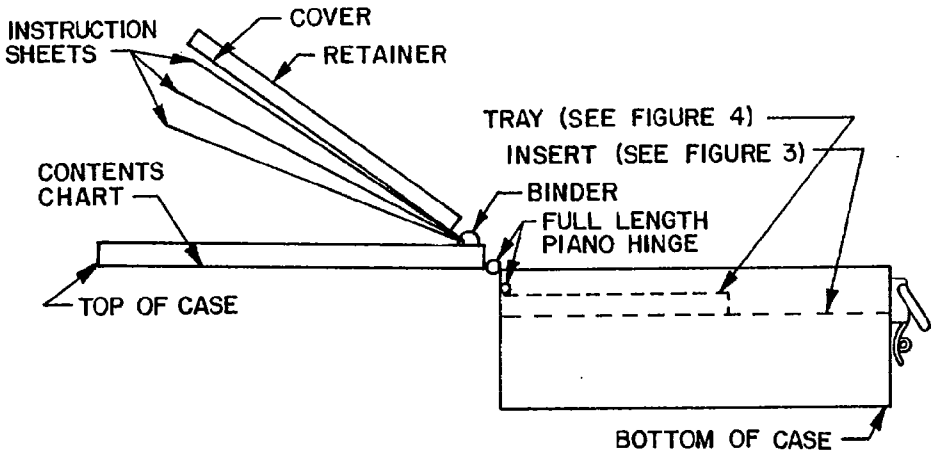

NOTES:
1. See figure 5, note 4.
2. Part number M83521/6-02 is for case only (tools not included).

FIGURE 2. Maintenance case assembly.

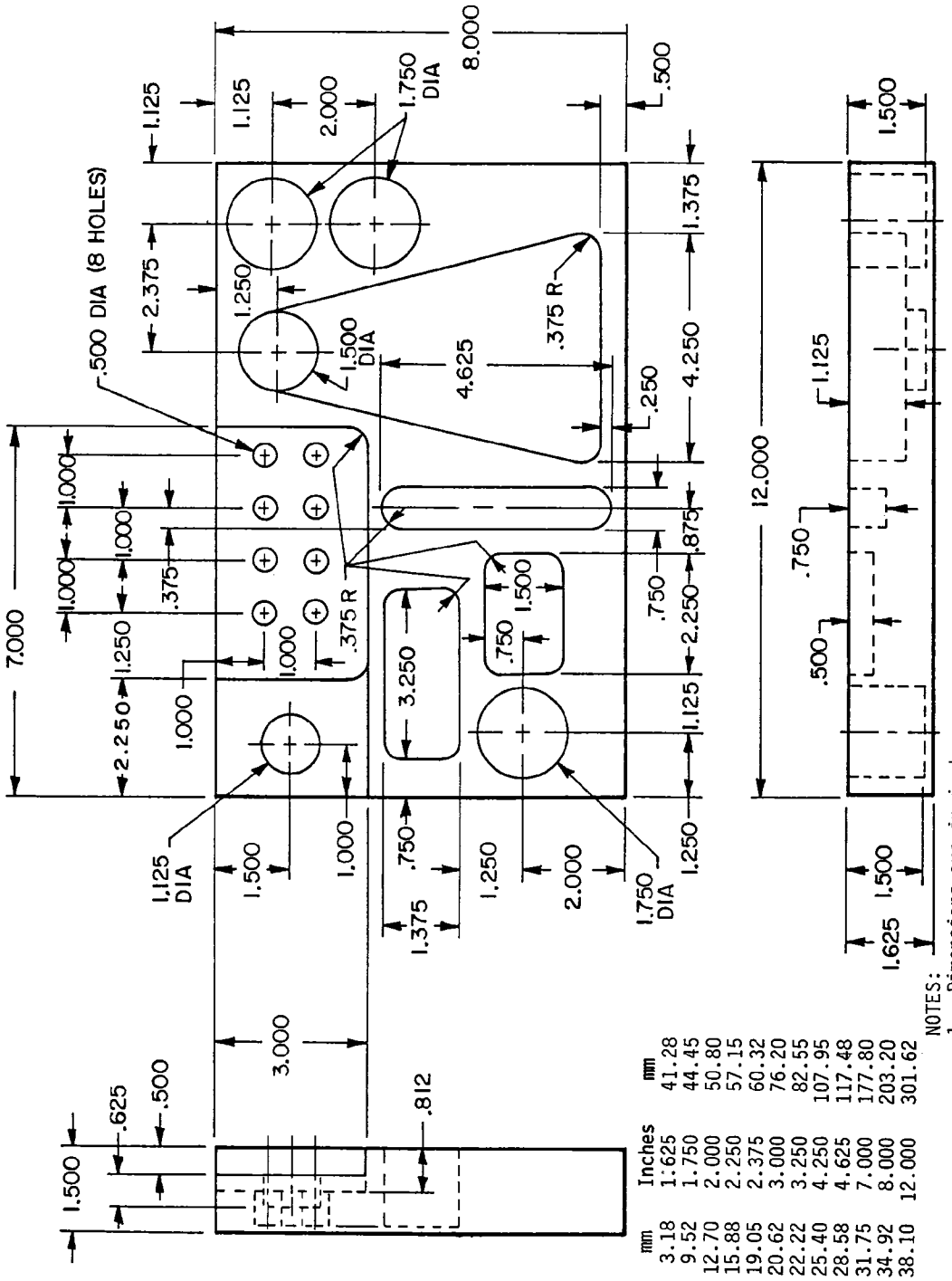

Inches	mm
.250	3.18
.375	9.52
.500	12.70
.625	15.88
.750	19.05
.812	20.62
.875	22.22
1.000	25.40
1.125	28.58
1.250	31.75
1.375	34.92
1.500	38.10

Inches	mm
1.625	41.28
1.750	44.45
2.000	50.80
2.250	57.15
2.375	60.32
3.000	76.20
3.250	82.55
4.250	107.95
4.625	117.48
7.000	177.80
8.000	203.20
12.000	301.62

NOTES:
1. Dimensions are in inches.
2. Metric equivalents are given for general information only.
3. Unless otherwise specified, tolerance is ±.031 (0.79 mm).
4. Remove all burrs, break sharp edges and corners.
5. This insert is a part of the maintenance assembly (see figure 2).

FIGURE 3. Insert, bottom of case.

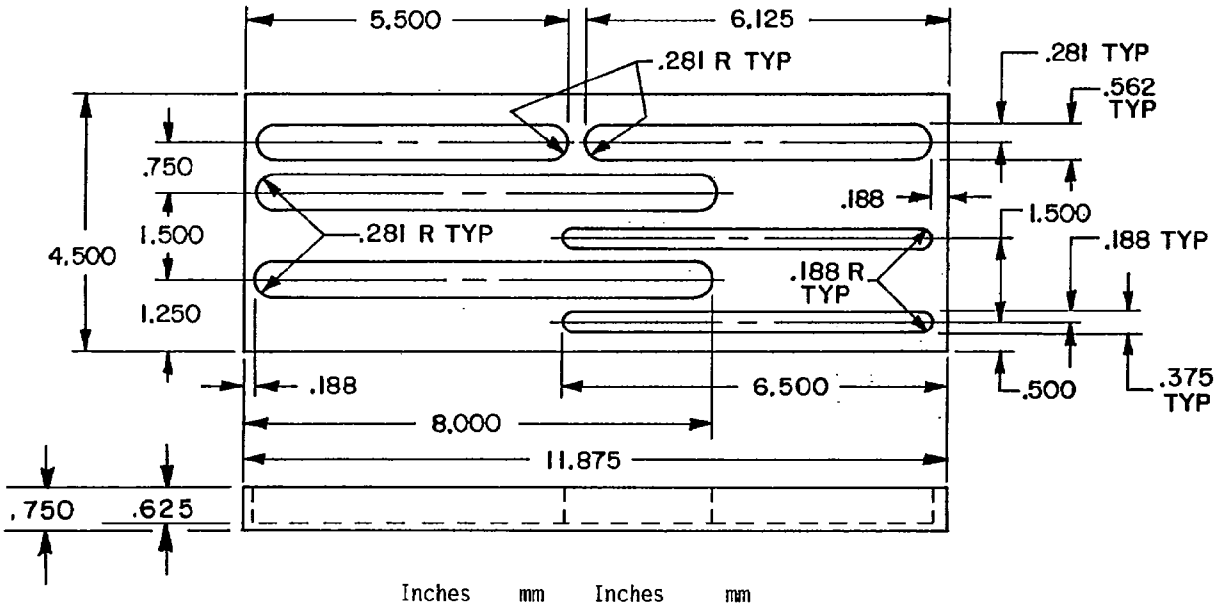

Inches	mm	Inches	mm
.188	4.78	1.250	31.75
.281	7.14	1.500	38.10
.375	9.52	4.500	114.30
.500	12.70	5.500	139.70
.562	14.27	6.125	155.58
.625	15.88	6.500	165.10
.750	19.05	8.000	203.20
		11.875	301.62

NOTES:
1. Dimensions are in inches.
2. Metric equivalents are given for general information only.
3. Unless otherwise specified, tolerance is ±.031 (0.79 mm).
4. Remove all burrs, break sharp edges and corners.
5. This tray is part of the maintenance case assembly (see figure 2).

FIGURE 4. Tray.

Inches	mm	Inches	mm	Inches	mm	Inches	mm
.125	3.18	.812	20.62	2.000	50.80	6.125	155.58
.188	4.78	.875	22.22	2.250	57.15	6.500	165.10
.250	6.35	1.000	25.40	2.375	60.32	8.000	203.20
.281	7.14	1.125	28.58	3.000	76.20	8.188	207.98
.375	9.52	1.250	31.75	3.250	82.55	11.875	301.62
.500	12.70	1.375	34.92	4.250	107.95	12.000	304.80
.562	14.27	1.500	38.10	4.500	114.30	12.375	314.32
.625	15.88	1.625	41.28	4.625	117.48		
.750	19.05	1.750	44.45	5.500	139.70		

NOTES:
1. Dimensions are in inches.
2. Metric equivalents are given for general information only.
3. Unless otherwise specified, tolerance is ±.031 (0.79 mm).
4. Remove all burrs, break sharp edges and corners.

FIGURE 5. Drawing notes and metric equivalents.

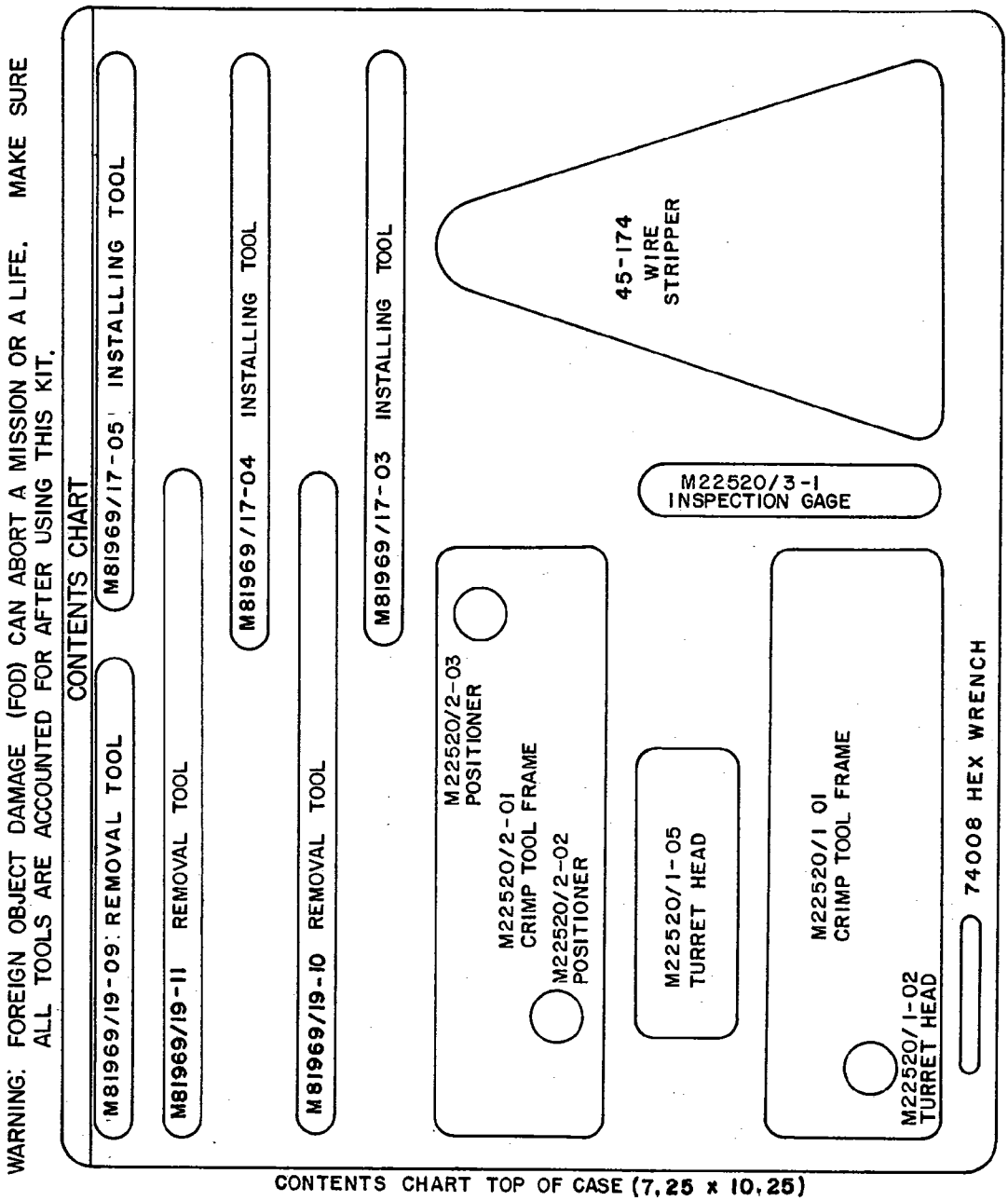

FIGURE 6. Contents chart (top).

INSTRUCTION SHEETS ARE AS FOLLOWS:

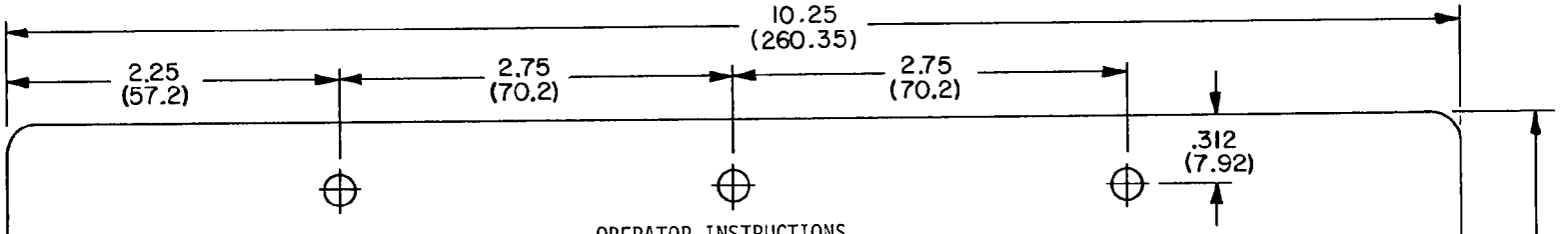

OPERATOR INSTRUCTIONS

INTRODUCTION

This kit contains M22520/1-01 and M22520/2-01 crimping tools for crimping removable contacts used in electric connectors. Included also are crimp tool accessories: M22520/1-02 turret head assembly, M22520/1-05 universal head assembly, M22520/3-1 gage, and 9/64 hex wrench. For M22520/2-01 miniature crimping tool, positioners M22520/2-02 and M22520/2-03 are included. The gage M22520/3-1 is used to check both crimping tools. In addition, kit contains wire stripping tool plus military standard installing and removal tools shown on contents chart.

Basic M22520/1-01 crimping tool provides eight indenter closures controlling depth of indent by means of a positive stop. Tool will crimp wire sizes 12 thru 26 AWG.

Basic M22520/2-01 miniature crimping tool also provides eight indenter closures controlled in like manner. Tool will crimp 20 thru 30 AWG.

MIL-C-26500 connectors are marked with prefix MS24264, MS24265 , MS24266, MS27613, MS27614 or MS27615. MIL-C38300 connectors are marked with prefix M38300.

PROCEDURE - M22520/1-01 CRIMPING TOOL

1. Contact size, type and AWG must be known to obtain a compatible crimp joint. Select proper head assembly to accommodate contact to be crimped.
2. Attach head assembly to M22520/1-01 as indicated on page 3.
3. With tool in open position, rotate selector knob to correct selection. See instructions for indenter closure selector on page 2.
4. Tool is now ready for use. Insert contact and prepared wire through indenter opening and into turret positioner or universal head assembly. Close handle until tool bottoms and ratchet releases. Release handle and tool will open.

PROCEDURE - M22520/2-01 MINIATURE CRIMPING TOOL

1. Contact size, type and AWG must be known to obtain a compatible crimp joint. Select proper positioner to accommodate contact to be crimped.
2. Attach positioner to M22520/2-01 as indicated on page 8.
3. Rotate selector knob to correct selection with tool in open position. See instructions for indenter closure selection on page 8.
4. Tool is now ready for use. Insert contact and prepared wire through indenter opening and into positioner. Close handle until tool bottoms and ratchet releases. Release handle and tool will open.

FIGURE 7. Operator instructions.

CHART "A" (TYPICAL)					
TURRET HEAD ASSY.		POSITIONER IDENTIFICATION			CONTACTS ACCOMMODATED (REF.)
PART NO.	COLOR				
M22520/1-02	BLUE	(20) RED	(16) BLUE	(12) YELLOW	M39029/31 M39029/32 MS18134 MS18136 M39029/01 M39029/4 M39029/5
M22520/1-05	BLUE	Wire size setting on M22520/1-01 basic crimping tool used with universal head assembly M22520/1-05 meet requirements of M39029. When other wire/contact combinations are used, selector settings must be established by user.			

CONTACT SIZE	POSITIONER AND MATING END COLOR	26	24	22	20	18	16	14	12	WIRE SIZE
20-20	RED	1	2	3	4					
16-22	BLUE	4	5	6						SELECTOR NO.
16-20*	BLUE	1	2	3	4					
16-16	BLUE				4	5	6			
12-16	YELLOW				4	5	6			
12-12	YELLOW							7	8	

MS3162 & 64 MS3192 & 93 MS18134 & 36 MS24254 & 55 MS90453 & 54
M39029/1,/2,/3,/4,/5,/9,/10,/11,/12,/31,/32,/44,/45
M83723/29,/30,/33,/34 *M39029/1-101 USE RED POS.

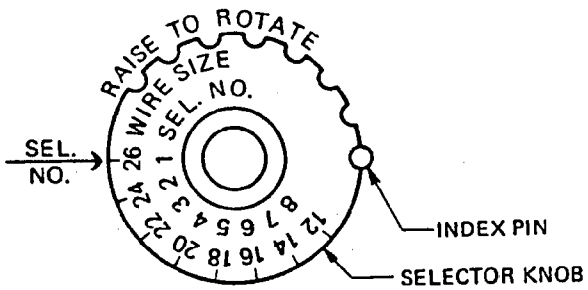

INSTRUCTIONS FOR USING INDENTER CLOSURE SELECTOR FOR M22520/1-01 CRIMPING TOOL

1. Refer to data plate on head assembly. Below wire size and opposite contact size is listed correct indenter selector number.
2. Tool must be in open position when using selector.
3. Raise selector knob and rotate until arrow is in line with correct selector number. Release selector knob so that index pin engages notch and is locked at proper selector number.
4. Repeat instruction procedures when changing contact and/or wire size.

FIGURE 8. M22520/1-01 crimping tool.

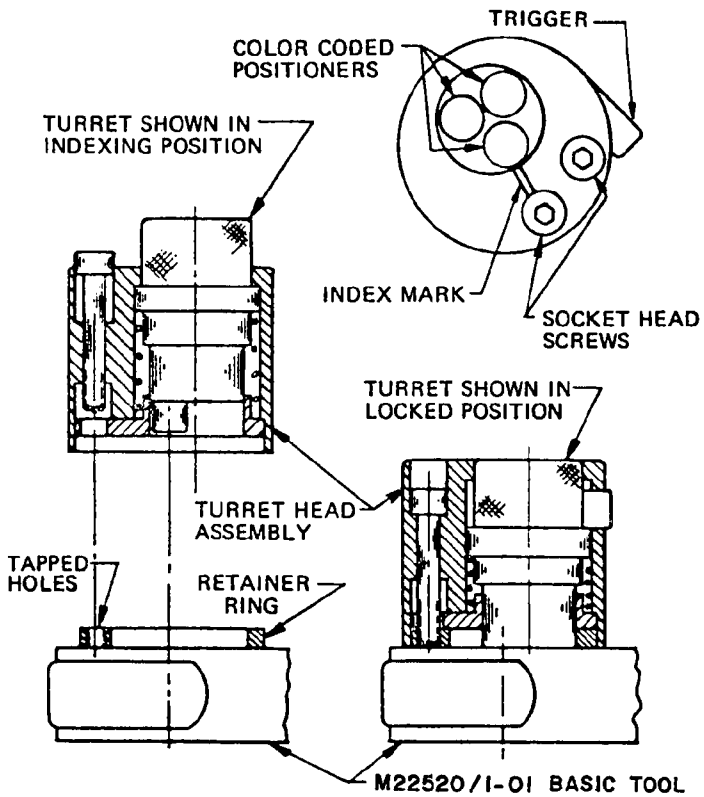

INSTRUCTIONS FOR CHANGING HEAD ASSEMBLIES AND INDEXING TURRET M22520/1-01 CRIMPING TOOL

1. Press trigger which releases turret to indexing position.
2. Place selected turret head assembly onto retainer ring with screws lined up with tapped holes.
3. After turret head assembly is seated against retainer ring, tighten socket head screws with part number 74008 - .141 hex wrench. Turret will index easily without binding.
4. Select positioner desired from color coded data plate on side of turret head assembly. See Chart A, on page 2.
5. Index turret until color coded positioner is lined up with index mark on top of turret head assembly, at which time trigger will position turret.
6. Press turret until it snaps into locked position.

To remove turret head assembly - press trigger loosen socket head screw until threads are disengaged from retainer ring and remove with a straight lifting motion.

FIGURE 9. M22520/1-01 Crimping tool.

CRIMPING INSTRUCTIONS WHEN USING M22520/1-05 UNIVERSAL HEAD ASSEMBLY

INTRODUCTION

M22520/1-05 universal head assembly is used with M22520/1-01 crimping tool to locate contacts horizontally and vertically between indenters (other than MS contacts).

PROCEDURE

1. Attach universal head assembly to M22520/1-01 basic crimping tool by means of socket head screws.
2. Raise selector knob and rotate until arrow is in line with wire size to be crimped in contact.
3. With lock nut in release position, turn adjustment screw IN until it stops. Insert contact thru indenter opening into positioner and adjust screw OUT until indenters are centered between inspection hole and barrel end of contact. When contact contains insulation cup, center between inspection hole and bottom of insulation cup.
4. Tighten lock nut to body and tool is ready for crimping operation.
5. Insert wire into contact and hold securely to insure that it bottoms in contact. Close handles until tool bottoms and ratchet 'kicks off'. Release handles and remove crimped contact.

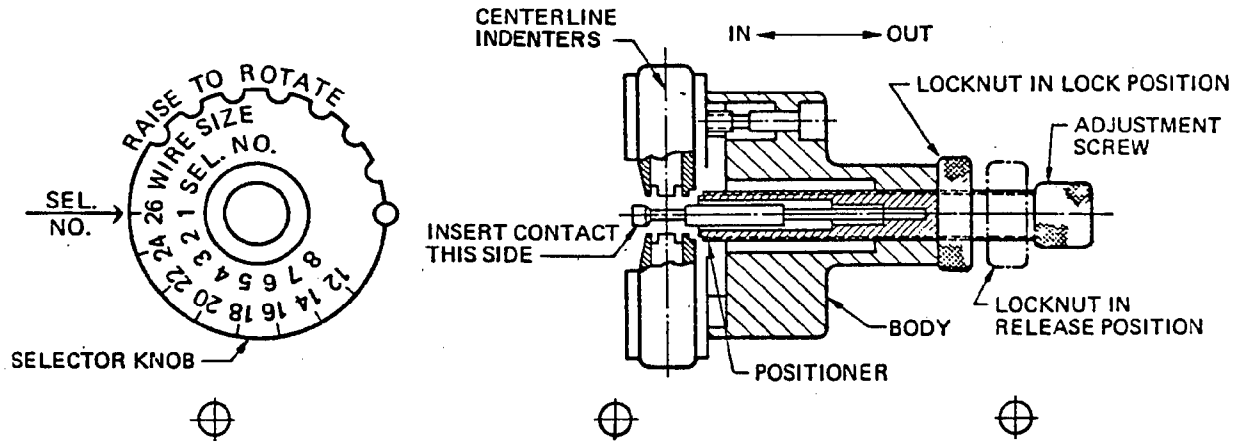

Figure 10. M22520/1-05 universal head assembly.

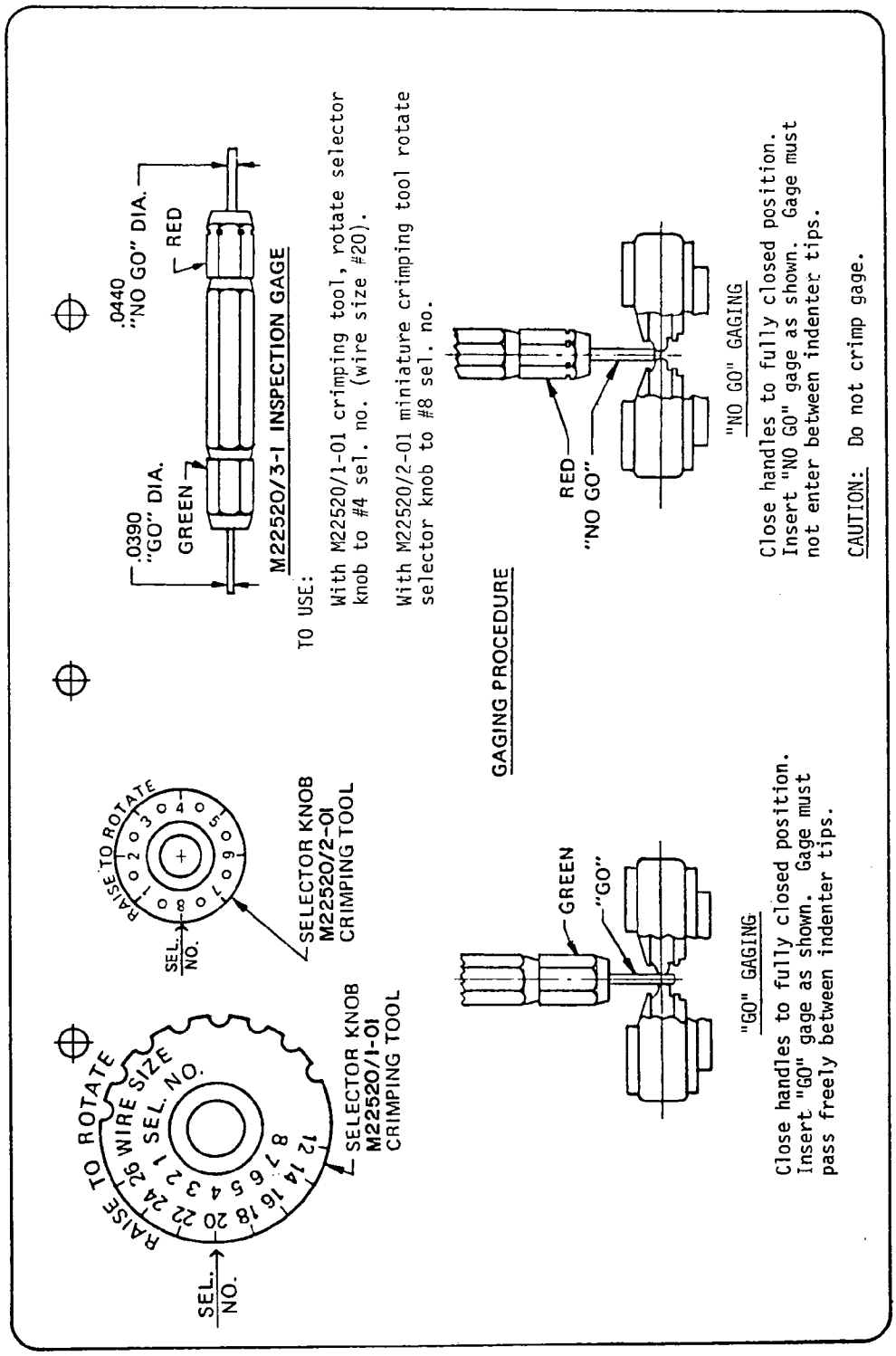

FIGURE 11. Gaging procedure.

OPERATING INSTRUCTIONS - REMOVAL TOOLS - MIL-C-26500 & MIL-C-38300 CONNECTORS

1. Select correct contact removal tool from Table 1. (Coaxial contacts are excepted.)
2. Tool must be held in straight line; parallel to contact, square to connector face.
3. To remove MIL-C-38300 socket contacts, use three bladed tip (⊛) of removal tool.
   a. Orient three bladed tip into connector, slowly pressing tool, until tip bottoms against retention clip tube. Maintain pressure (approx. 8 lbs.) and push forward on plunger to eject contact.

4. To remove MIL-C-38300 pin contacts and MIL-C-26500 pin and socket contacts, use barrel tip end of removal tool.
   a. For MIL-C-26500 socket contacts, insert removal tip into connector to second mark on barrel, which will release retention clip. Push plunger slide forward to eject contact. (Also MIL-C-26482 sockets)
   b. For MIL-C-38300 and MIL-C-26500 pin contacts, insert removal tool tip into connector to first mark on barrel, which will release retention clip, then push plunger slide forward to eject contact. (Also MIL-C-26482 pins)

NOTE: Plunger slide must remain in retracted position as removal tool tip/barrel is inserted in connector.

TABLE I.

REMOVAL TOOL	CONTACT SIZE
M81969/19-10	20
M81969/19-11	16
M81969/19-09	12

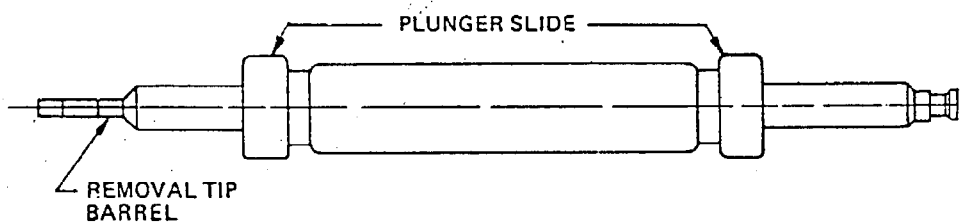

FIGURE 12. Removal tools.

OPERATING INSTRUCTIONS - INSTALLING TOOLS - MIL-C-38300, MIL-C-26500 AND MIL-C-26482 CONNECTORS.

1. Select correct tool from Table II and place contact/wire assembly in tool.
   a. #20 contacts with insulation cups are inserted by sliding cup into front end of installing tip until end of cup butts against shoulder in installing tip, as shown in figure 1.
   b. Contacts without insulation cups are inserted by sliding wire barrel into front end of installing tip until contact shoulder butts against installing tip. Figure 2.

2. Align tool and contact axially with grommet hole and carefully guide contact through grommet into lock position.

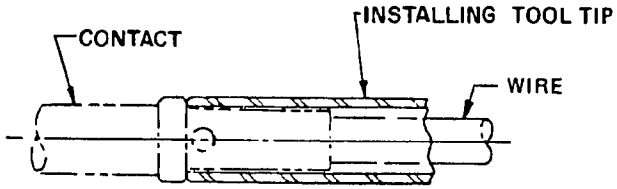

FIGURE 2

TABLE II.

INSTALLING TOOL	CONTACT SIZE
M81969/17-03	20
M81969/17-04	16
M81969/17-05	12

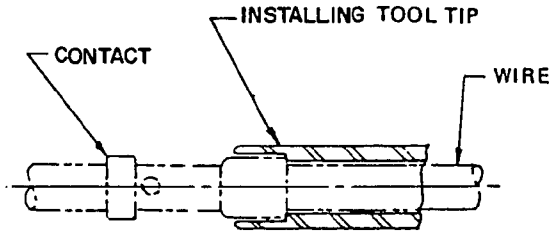

FIGURE I

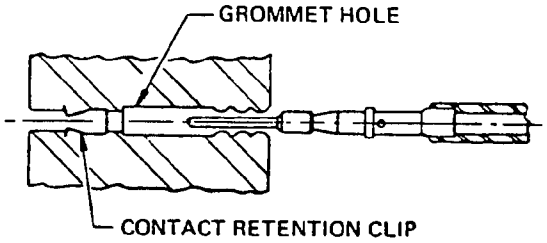

FIGURE 13. Installing tools.

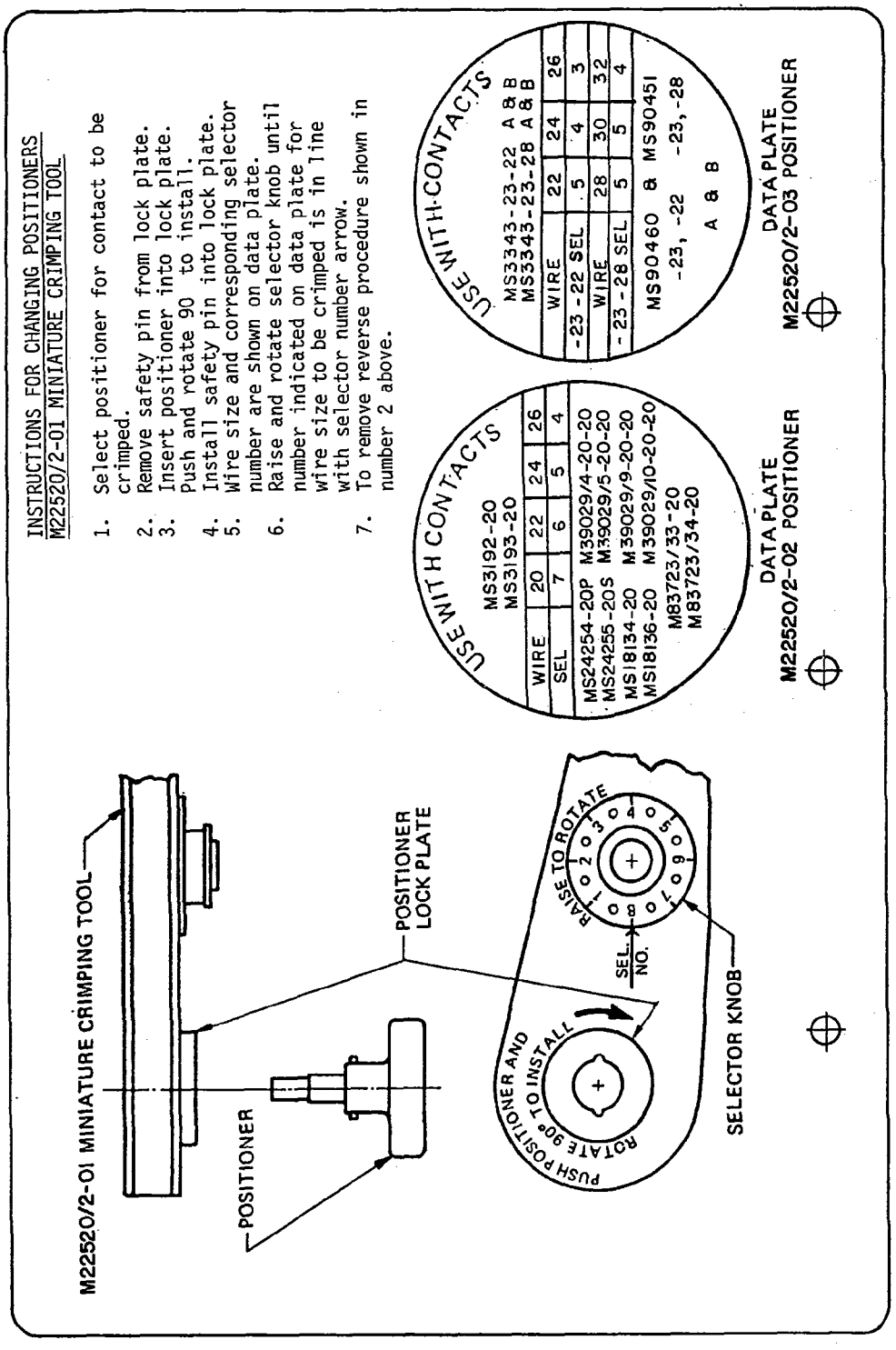

FIGURE 14. M22520/2-01 miniature crimping tool.

REQUIREMENTS:

Design and configurations: See figures 1 through 14.

Materials:

Case, cover, and tray (category 3): Sheet metal, 19 gage in accordance with QQ-S-698; gray baked enamel on all metal parts.

Instruction sheets and contents chart: White vinyl 0.020 inch (0.51 mm) thick.

Insert and retainer pad: Fire retardant foamed polyethylene in accordance with PPP-C-1752; color is optional.

Clasp: Draw pull type with provision for locking device, handle, and hinges, suitably plated to resist corrosion.

Binder: Looseleaf, three rings, 0.437 (11.10 mm) ±0.062 (1.57 mm) inch I.D., 2.75 inches (69.9 mm) center distance between rings, securely riveted to inside of cover (see figure 2).

Nameplate: In accordance with MIL-P-19834.

Instruction sheets and contents chart (see figures 7 through 14): Lettering shall be legible and protected with a transparent coating. Contents chart (centered on inside of case cover): Pressure sensitive adhesive backing, shows the insert cavity configurations and the respective tool part number; a list of NSN's will also be supplied.

Part number:

M83521/6-01 - Maintenance kit (see figure 1 - parts list).
M83521/6-02 - Maintenance case assembly (see figure 2).

Note: Specific replacement parts may be replenished by individually ordering the type designations as shown on the contents chart.

QUALIFICATION:

Qualifying activity: Defense Electronics Supply Center, (DESC-E), Dayton, OH 45444.

Custodians:
Army - CR
Air Force - 85

Review activities:
Army - AR, AV, GL, MI, WC
Navy - EC, OS, SH
Air Force - 11, 17, 99
DLA - ES

User activities:
Army - AT, ME
Navy - MC
Air Force - 19

Preparing activity:
Air Force - 85

Agent:
DLA - ES

(Project 5935-3533)