INCH-POUND

MIL-DTL-83528/13E
15 November 2001
SUPERSEDING
MIL-G-83528/13D
28 March 1994

DETAIL SPECIFICATION SHEET

GASKETING MATERIAL, CONDUCTIVE, SHIELDING GASKET, ELECTRONIC, ELASTOMER, ELECTRICAL, EMI/RFI, WAVEGUIDE

This specification is approved for use by all Departments and Agencies of the Department of Defense.

The requirements for acquiring the relay described herein shall consist of this specification and the latest issue of MIL-DTL-83528.

Frequency range (GHz)	Band	EIA wave-guide size	Waveguide designation per MIL-DTL-85	Flange designation per MIL-F-3922			Flange type	Gasket config-uration	Part or Identifying Number (PIN) M83528/013X
				UG	CPR	CMR			
26.5-40.0	K_a	WR28	RG-96/U (Silver)	UG-599/U			Cover	A	001 1/
				UG-600A/U			Choke	E	002
18.0-26.5	K	WR42	RG-53/U (Brass)	UG-595/U UG-597/U			Cover	A	003 1/
			RG-121/U (Aluminum)	UG-596A/U UG-598A/U			Choke	E	004
12.4-18.0	K_u	WR62	RG-91 (Brass)	UG-419/U			Cover	A	005 1/
			RG-107/U (Silver)	UG-541A/U			Choke	E	006
10.0-15.0		WR75					Cover	A	007
							Choke	E	008
8.2-12.4	X	WR90	RG-52/U (Brass)	UG-39/U UG-135/U			Cover	A	009
			RG-67/U (Aluminum)	UG-1736/U UF-1737/U	CPR-90F		Flat contact	A	010 1/
				UG-136A/U UG-40A/U			Choke	E	011
				UG-136B/U UG-40B/U			Choke	E	012
				UG-1360/U UG-1361/U	CPR-90G		Contact	C	013
7.0-11.0		WR102		UG-1494/U			Choke	E	014

See footnote at end of table.

DISTRIBUTION STATEMENT A . Approved for public release; distribution is unlimited.

Frequency range (GHz)	Band	EIA wave-guide size	Waveguide designation per MIL-DTL-85	Flange designation per MIL-F-3922			Flange type	Gasket config-uration	Part or Identifying Number (PIN) M83528/013X
				UG	CPR	CMR			
7.05-10.0	X_1	WR112	RG-51/U (Brass)	UG-51/U UG-138/U			Cover	A	015
			RG-68/U (Aluminum)	UG-1734/U UF-1735/U	CPR-112F		Flat contact	A	016 1/
				UG-52B/U UG-137B/U			Choke	E	017
				UG-1358/U UF-1359/U	CPR-112G		Contact	C	018
5.85-8.2	X_b	WR137	RG-50/U (Brass)	UG-334/U UG-441/U			Cover	B	019
			RG-106/U (Aluminum)	UG-1732/U UG-1733/U	CPR-137F		Flat contact		020 1/
						CMR-137	Flat contact	A	021 1/
				UG-343B/U UG-440B/U			Choke	D	022
				UG-1356/U UG-1357/U	CPR-137G		Contact	C	023
4.9-7.05		WR159		UG-1730/U UG-1731/U	CPR-159F		Flat contact	A	024 1/
						CMR-159	Flat contact	A	025 1/
3.95-5.85	C	WR187	RG-49/U (Brass)	UG-149A/U UG-407/U			Cover	B	26
			RG-95/U (Aluminum)	UG-1728/U UG-1729/U	CPR-187F		Flat contact	A	027 1/
						CMR-187	Flat contact	A	028 1/
				UG-148C/U UG-406B/U			Choke	D	029
				UG-1352/U UG-1353/U	CPR-187G		Contact	C	030
3.30-4.90		WR229		UG-1726/U UG-1727/U	CPR-229F		Flat contact	A	031 1/
						CMR-229	Flat contact	A	032 1/

See footnote at end of table.

Frequency range (GHz)	Band	EIA wave-guide size	Waveguide designation per MIL-DTL-85	Flange designation per MIL-F-3922			Flange type	Gasket config-uration	Part or Identifying Number (PIN) M83528/013X
2.6-3.95	S	WR284	RG-48/U (Brass)	UG-53/U UG-584/U			Cover	B	033 1/
				UG-1724/U UG-1725/U	CPR-284F		Flat contact	A	034 1/
						CMR-284	Flat contact	A	035 1/
			RG-75/U (Aluminum)	UG-54B/U UG-585A/U			Choke	E	036
				UG-1348/U UG-1349/U	CPR-284G		Contact	C	037
2.2-3.3		WR340	RG-112/U (Brass) RG-112/U (Aluminum)	UG-533/U UG-554/U			Flat contact	A	038 1/
					CPR-340F		Flat contact	A	039 1/
1.7-2.6	W	WR430	RG-104/U (Brass) RG-105/U (Aluminum)	UG-435A/U UG-437A/U			Flat contact	A	040 1/
					CPR-430F		Flat contact	A	041 1/
1.12-1.7	L	WR650	RG-69/U (Brass) RG-103/U (Aluminum)	UG-417A/U UG-418A/U			Flat contact	A	042 1/

1/ This gasket will seal a maximum pressure of 20 psig.

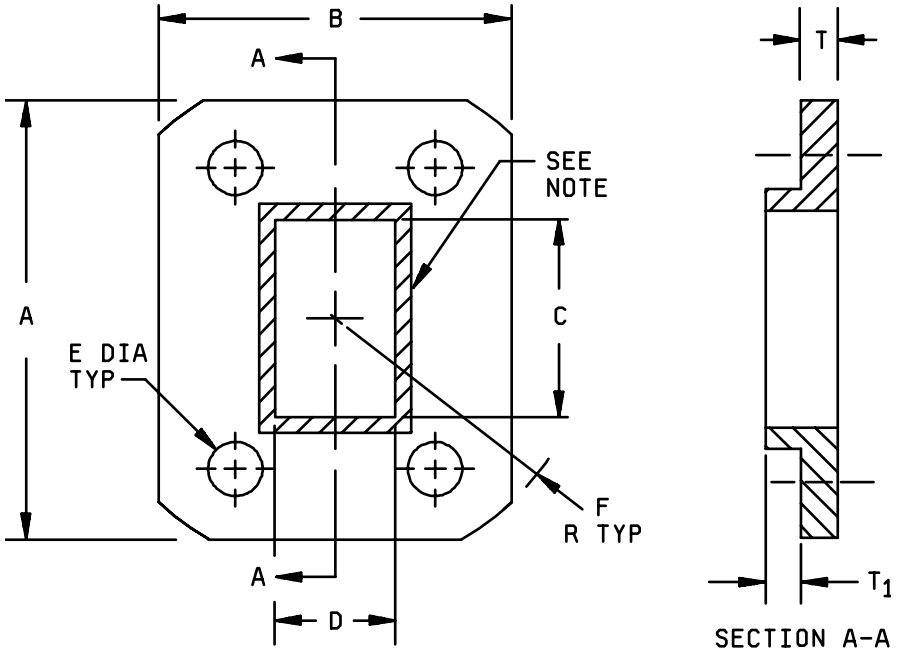

CONFIGURATION A - DIE CUT SQUARE AND RECTANGULAR

NOTE: Shaded area indicates optional raised lip. When included, the lip shall be a nominal of .187 (4.75 mm) wide. Thickness T_1 shall be .004 (0.10 mm) ± .002 (0.05 mm). Lip is standard on configuration A dash numbers without footnote 1/ reference in table I. For dash numbers in table I with footnote 1/ reference, lip is optional.

Dimensions (Configuration A)							Part or Identifying Number (PIN) M83528/013X	Cross section area (cm^2) 2/
A ± .015 (0.38)	B ± .015 (0.38)	C ± .015 (0.38) -.000 (0.00)	D ± .015 (0.38) -.000 (0.00)	E 1/ ± .010 (0.25)	T ± .003 (0.08)	F Radius ± .010 (0.25)		
.750 (19.05)	.750 (19.05)	.145 (3.68)	.285 (7.24)	.116 (2.95)	.027 (0.69)	.469 (11.91)	001	.0082
.875 (22.23)	.875 (22.23)	.175 (4.45)	.425 (10.80)	.116 (2.95)	.027 (0.69)	.563 (14.30)	003	.0095
1.313 (33.35)	1.313 (33.35)	.630 (16.00)	.320 (8.13)	.140 (3.56)	.027 (0.69)	.875 (22.23)	005	.0092
1.496 (38.00)	1.496 (38.00)	.760 (19.30)	.385 (9.78)	.155 (3.94)	.027 (0.69)	.450 (11.43)	007	.0099
1.625 (41.28)	1.625 (41.28)	.905 (22.99)	.405 (10.29)	.169 (4.29)	.027 (0.69)	.469 (11.91)	009	.0097
1.594 (40.49)	2.094 (53.19)	.405 (10.29	.905 (22.99)	.169 (4.29)	.027 (0.69)	.250 (6.35)	010	.0161

FIGURE 1. Configurations and dimensions. Dimensions (Configuration A – Continued.)							Part or Identifying Number (PIN) M83528/013X	Cross section area (cm^2) 2/
A ± .015 (0.38)	B ± .015 (0.38)	C ± .015 (0.38) -.000 (0.00)	D ± .015 (0.38) -.000 (0.00)	E 1/ ± .010 (0.25)	T ± .003 (0.08)	F Radius ± .010 (0.25)		
1.875 (47.63)	1.875 (47.63)	1.130 (28.70)	.505 (12.83)	.180 (4.57)	.027 (0.69)	1.15 (29.21)	015	.0101
1.750 (44.45)	2.500 (63.50)	.505 (12.83)	1.130 (28.70)	.171 (4.34)	.027 (0.69)	.250 (6.35)	016	.076
1.937 (49.20)	2.687 (68.25)	.633 (16.08)	1.380 (35.05)	.206 (5.23)	.027 (0.69)	.250 (6.35)	020	.0176
1.531 (38.89)	2.281 (57.94)	.632 (16.05)	1.382 (35.10)	.150 (3.81)	.027 (0.69)	.125 (3.18)	021	.0121
2.438 (61.93)	3.188 (80.98)	.805 (20.45)	1.600 (40.64)	.257 (6.53)	.027 (0.69)	.313 (7.95)	024	.0220
1.750 (44.45)	2.500 (63.50)	.800 (20.32)	1.600 (40.64)	.160 (4.06) .150 (3.81)	.027 (0.69)	.125 (3.18)	025	.0128
3.500 (88.90)	2.500 (63.50)	1.880 (47.75)	.880 (22.35)	.266 (6.76)	.027 (0.69)	.313 (7.95)	027	.0219
1.784 (45.31)	2.781 (70.64)	.882 (22.40)	1.882 (47.80)	.156 (3.96) .141 (3.58)	.027 (0.69)	.125 (3.18)	028	.0122
2.750 (69.85)	3.875 (98.43)	1.155 (29.34)	2.300 (58.42)	.270 (6.86)	.027 (0.69)	.312 (7.92)	031	.0215
2.000 (50.80)	3.156 (80.16)	1.155 (29.34)	2.300 (58.42)	.150 (3.81)	.027 (0.69)	.125 (3.18)	032	.0114
4.500 (114.30)	3.000 (76.20)	2.850 (72.39)	1.350 (34.29)	.266 (6.76)	.027 (0.69)	.313 (7.95)	034	.0223
3.844 (97.64)	2.344 (59.54)	2.850 (72.39)	1.350 (34.29)	.172 (4.37) .188 (4.78)	.027 (0.69)	.125 (3.18)	035	.0134
3.750 (95.25)	5.440 (138.18)	1.710 (43.43)	3.410 (86.61)	.264 (6.71) .250 (6.35)	.027 (0.69)	.250 (6.35)	038	.0275
3.750 (95.25)	5.438 (138.13)	1.710 (43.43)	3.410 (86.61)	.266 (6.76)	.027 (0.69)	.250 (6.35)	039	.0275
4.188 (106.38)	6.344 (161.14)	2.160 (54.86)	4.310 (109.47)	.266 (6.76) .281 (7.14)	.027 (0.69)	.250 (6.35)	040	.0274
6.344 (161.14)	4.188 (106.38)	4.310 (109.47)	2.160 (54.86)	.266 (6.76)	.027 (0.69)	.250 (6.35)	041	.0275
5.438 (138.13)	8.688 (220.68)	3.260 (82.80)	6.510 (165.35)	.250 (6.35) .328 (8.33)	.027 (0.69)	.250 (6.35)	042	.0294

1/ Number and location of holes conform to holes in standard waveguide flanges identified in table I. Where two hole diameters are given, flange has holes of two different diameters.
2/ For calculation of volume resistivity (surface probe).

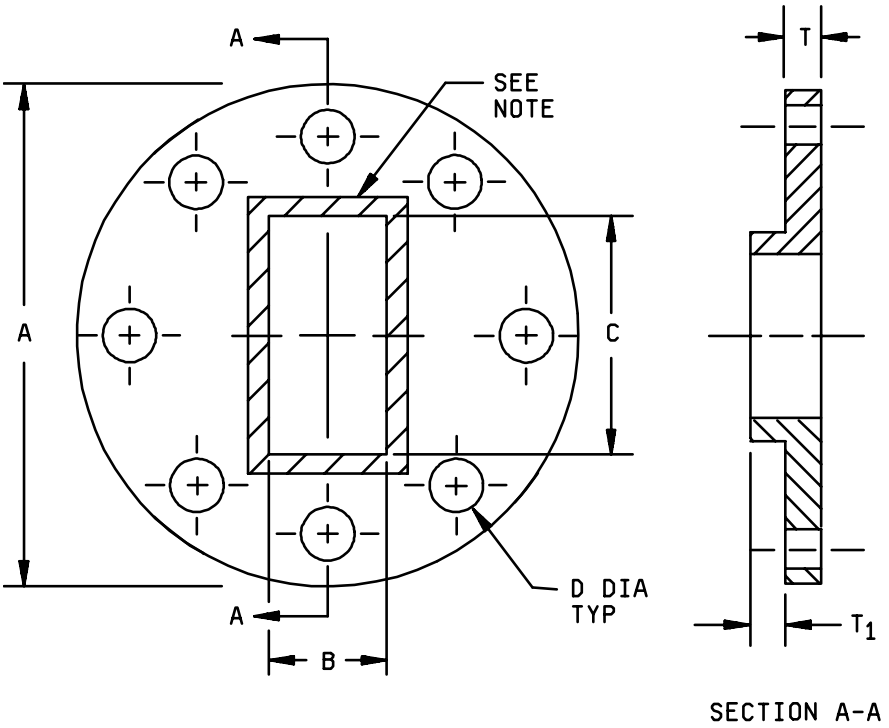

CONFIGURATION B – DIE CUT CIRCULAR

NOTE: Shaded area indicates optional raised lip. When included, the lip shall be a nominal of .187 (4.75 mm) wide. Thickness T_1 shall be .004 (0.10 mm) ±.002 (0.05 mm). Lip is standard on configuration B dash numbers without footnote 1/ reference in table I. For dash numbers in table I with footnote 1/ reference, lip is optional.

Dimensions (Configuration B)					Part or Identifying Number (PIN) M83528/013X	Cross section area (cm^2) 2/
A ± .015 (0.38)	B ± .015 (0.38) -0.000 (0.00)	C ± .015 (0.38) -0.000 (0.00)	D 1/ ± .010 (0.25)	T ± .005 (0.13)		
3.125 (79.38)	.632 (16.05)	1.382 (35.10)	.234 (5.94)	.027 (0.69)	019	.0337
3.625 (92.08)	.882 (22.40)	1.882 (47.80)	.234 (5.94)	.027 (0.69)	026	.0370
5.312 (134.92)	1.350 (34.29)	2.850 (72.39)	.290 (7.37)	.027 (0.69)	033	.0535

1/ Number and location of holes conform to holes in standard waveguide flanges identified in table I.
2/ For calculation of volume resistivity (surface probe).

FIGURE 1. Configurations and dimensions – Continued.

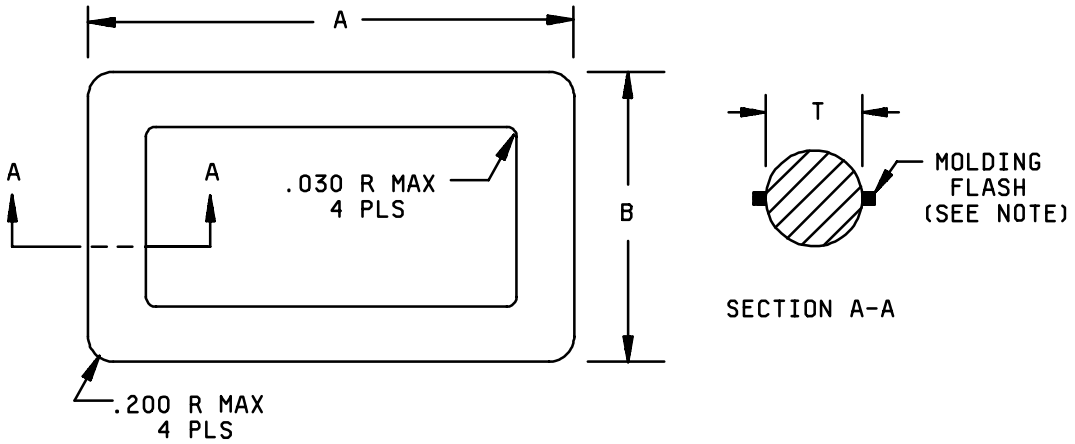

CONFIGURATION C – MOLDED RECTANGULAR WITH "O" CROSS SECTION

NOTE: Molding flash of .003 (0.08 mm) in width (maximum) and .005 (0.13 mm) in thickness (maximum) is allowed.

Dimensions (Configuration C)			Part or Identifying Number (PIN) M83528/013X	Cross section area (cm^2) 1/
1.368 (34.75) ± .012 (0.03)	.868 (22.05) ± .010 (0.25)	.103 (2.62) ± .003 (0.08)	013	.0538
1.616 (41.05) ± .015 (0.38)	.991 (25.17) ± 0.010 (0.25)	.103 (2.62) ± .003 (0.08)	018	.0538
1.866 (41.05) ± .015 (0.38)	1.116 (28.35) ± .012 (0.30)	.103 (2.62) ± .003 (0.08)	023	.0538
2.449 (62.20) ± .020 (0.51)	1.449 (36.80) ± .013 (0.33)	.139 (3.53) ± .004 (0.10)	030	.0979
3.451 (87.66) ± .024 (0.61)	1.951 (49.56) ± .018 (0.46)	.139 (3.53) ± .004 (0.10)	037	.0979

1/ For calculation of volume resistivity (surface probe).

FIGURE 1. Configurations and dimensions – Continued.

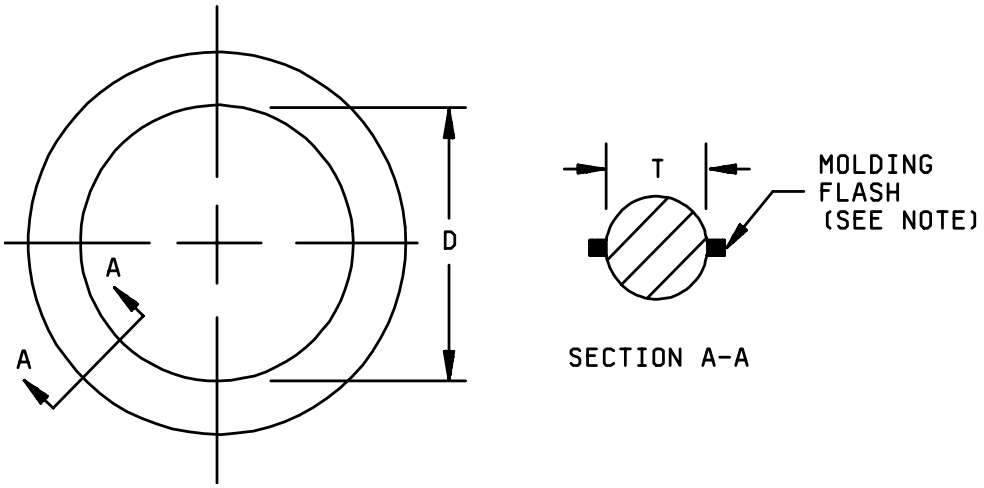

CONFIGURATION D – MOLDED CIRCULAR WITH "O" CROSS SECTION

NOTE: Molding flash of .003 (0.08 mm) in width (maximum) and .005 (0.13 mm) in thickness (maximum) is allowed.

Dimensions (Configuration D)		Part or Identifying Number (PIN) M83528/013X	Cross section area(cm^2) 1/
D (ID)	T		
2.011 (51.08) ± .018 (0.46)	.139 (3.53) ± .004 (0.10)	022	.0979
2.683 (68.15) ± .024 (0.61)	.115 (2.92) ± .004 (0.10)	029	.0670

1/ For calculation of volume resistivity (surface probe).

FIGURE 1. Configuration and dimensions – Continued.

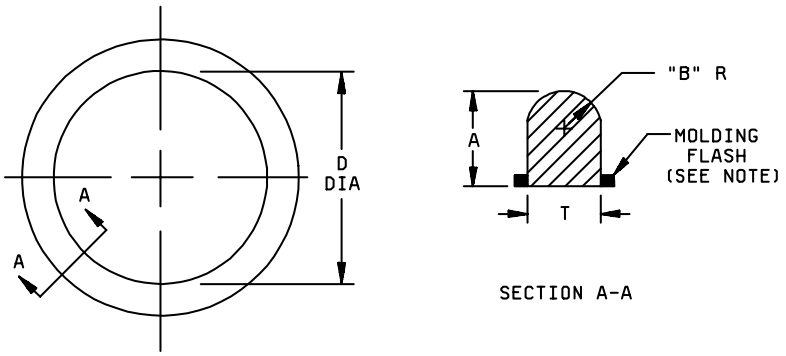

CONFIGURATION E - - MOLDED CIRCULAR WITH "D" CROSS SECTION

NOTE: Molding flash of .003 (0.08 mm) in width (maximum) and .005 (0.13 mm) in thickness (maximum) is allowed.

Dimensions (Configuration E)				Part or Identifying Number (PIN) M83528/013X	Cross section area (cm^2) 1/
A	B	D (ID)	T		
.056 (1.42)	.041 (1.04)	.410 (10.41)	.082 (2.08)	002	.025
.048 (1.22)	.039 (0.99)	.587 (14.91)	.078 (1.98)	004	.020
.125 (3.18)	.078 (1.98)	.885 (22.48)	.155 (3.94)	006	.109
.065 (1.65)	.049 (1.24)	1.122 (28.50)	.099 (2.51)	008	.035
.088 (2.24)	.048 (1.22)	1.340 (34.04)	.095 (2.41)	011	.048
.077 (1.96)	.058 (1.47)	1.310 (33.27)	.115 (2.92)	012	.048
.085 (2.16)	.048 (1.22)	1.392 (35.36)	0.95 (2.41)	014	.046
.078 (2.16)	.053 (1.35)	1.550 (39.37)	.105 (2.67)	017	.045
.188 (4.78)	.120 (3.05)	3.910 (99.31) ± .026 (0.66)	.240 (6.10)	036	.251

1/ For calculation of volume resistivity (surface probe).

NOTES:
1/ Dimensions are in inches; metric equivalents are given in parenthesis and are for general information only.
2/ Unless otherwise indicated, tolerances shall be as follows:

Dimensions	Tolerance
Under .101 (2.57)	± .005 (0.13)
.101 to .200 (2.57 to 5.08)	± .008 (0.20)
.201 to .300 (5.10 to 7.62)	± .010 (0.25)
.301 to .500 (7.62 to 12.70)	± .015 (0.38)
Over .500 (12.70)	± .020 (0.51)

FIGURE 1. Configurations and dimensions – Continued.

SELECTION GUIDE: See table I.

REQUIREMENTS:

Design and interface: See figure 1 and table I.

Materials:

Configuration A: Type G.

Configuration B: Type G.

Configuration C: Types C, F, H, or K.

Configuration D: Types C, F, H, or K.

Configuration E: Types C, F, H, or K.

Part or Identifying Number (PIN): See table I and figure 1. An "X" in the PIN represents the material type (see above). PIN example: M83528/013G001. Gaskets with optional high-pressure raised lip (see table I and figure 1) will have a "Z" added to their PIN's. Example: M83528/013G001Z.

Supersession information: See table II.

TABLE II. Supersession information.

MIL-G-83528/13B PIN M83528/013X	Superseded MIL-G-83528/13A PIN M83528/013X	Superseded DESC drawing PIN 85118X
002	001	001
004	002	002
006	003	003
008	004	004
012	005	005
011	006	006
014	007	007
017	008	008
036	009	009

1/ "X" in the PIN indicates the applicable material type.

Custodian:
Army - CR
Navy - EC
Air Force - 11
DLA - CC

Review activities:
Air Force – 19, 99
NASA – NA

Preparing activity:
DLA - CC

(Project 5999-0375-13)