INCH-POUND

MIL-DTL-83723/35F
20 October 2000
SUPERSEDING
MIL-C-83723/35E
10 November 1988

DETAIL SPECIFICATION SHEET

CONNECTOR, ELECTRIC, BACKSHELL, STRAIGHT W/O STRAIN RELIEF, AND WITH MECHANICAL STRAIN RELIEF, STRAIGHT OR RIGHT ANGLE THREADED COUPLING SERIES II

INACTIVE FOR NEW DESIGN

This specification is approved for use by all Departments and Agencies of the Department of Defense.

The requirements for acquiring the product described herein shall consist of this specification and MIL-DTL-83723.

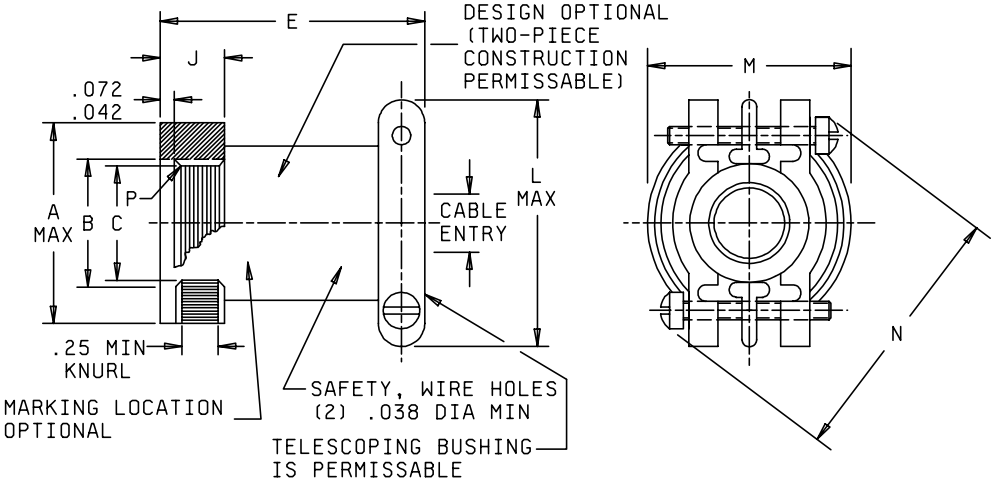

Inches	mm
.038	0.97
.042	1.07
.072	1.83
.25	6.35

NOTES:
1. Dimensions are in inches.
2. Metric equivalents are given for general information only.
3. Unless otherwise specified, tolerances are ± .005 (0.13 mm) for three place decimals, ± .010 (0.25 mm) for two place decimals, and angular tolerances X° = ± 1° 0′, X°X′ = ± 30′.
4. Dimensions apply after plating.
5. Remove all burrs and sharp edges.

FIGURE 1. Type S - Straight clamp.

DISTRIBUTION STATEMENT A. Approved for public release; distribution is unlimited.

Shell size	A Max dia	B dia	C dia	D dia	E max	J min	L max	M max	N max	P thread class 2B	Cable entry 3/	
											Fig. 1 max	Fig. 1 min
8	.585	.450 .440	.291 .281	.257 .245	1.290 (32.77)	.285	.843	.900 (22.86)	1.075	.438-28 UNEF	.235	.125
10	.645	.513 .503	.351 .341	.310 .300	1.290 (32.77)	.285	.843	.900 (22.86)	1.075	.500-28 UNEF	.235	.125
11	.730	.575 .565	.420 .410	.390 .380	1.290 (32.77)	.285	.906	.980 (24.89)	1.140	.562-24 UNEF	.297	.170
13 1/	.770	.640 .628	.471 .461	.415 .403	1.290 (32.77)	.285	1.085	.995 (25.27)	1.140	.625-24 UNEF	.297	.170
15 2/	.910	.765 .753	.575 .564	.497 .485	1.368 (34.75)	.285	1.093	1.160 (29.46)	1.360	.750-20 UNEF	.422	.235
17	1.035	.890 .878	.700 .690	.616 .604	1.430 (36.32)	.285	1.187	1.260 (32.00)	1.520	.875-20 UNEF	.547	.295
16	1.035	.890 .878	.700 .690	.616 .604	1.587 (40.31)	.440	1.275	1.260 (32.00)	1.520	.875-20 UNEF	.547	.295
18	1.170	1.015 1.003	.817 .807	.735 .725	1.695 (43.05)	.440	1.475	1.455 (36.96)	1.600	1.000-20 UNEF	.610	.325
20	1.300	1.140 1.128	.953 .943	.875 .865	1.695 (43.05)	.440	1.500	1.580 (40.13)	1.890	1.125-18 UNEF	.735	.380
22	1.420	1.265 1.255	1.083 1.073	.983 .973	1.695 (43.05)	.440	1.710	1.580 (40.13)	1.890	1.250-18 UNEF	.735	.380
24	1.535	1.390 1.378	1.190 1.180	1.095 1.085	1.931 (49.05)	.440	1.719	1.890 (48.01)	2.145	1.375-18 UNEF	.922	.500
28	1.800	1.640 1.628	1.410 1.400	1.255 1.245	1.931 (49.05)	.440	2.040	1.890 (48.01)	2.145	1.625-18 UNEF	.922	.500
32	2.035	1.890 1.878	1.664 1.654	1.525 1.515	1.869 (47.47)	.440	2.332	2.215 (56.26)	2.550	1.875-16 UN	1.235	.705
36	2.270	2.140 2.128	1.875 1.862	1.760 1.750	1.869 (47.47)	.440	2.312	2.405 (61.09)	2.889	2.125-16 UN	1.360	.725
40	2.780	2.395 2.385	2.208 2.198	2.020 1.865	2.875 (73.03)	.459	2.950	2.781 (70.64)	3.500	2.375-16 UN	1.630	.911

1/ Shell size 13 fits connector sizes 12 and 13.
2/ Shell sizes 14 and 15 fit connector sizes 14 and 16.
3/ “Cable entry” dimension is defined as the envelope area for the wire bundle. This dimension is not intended to define the clamp hardware limits.

FIGURE 1. Type S - Straight clamp - Continued.

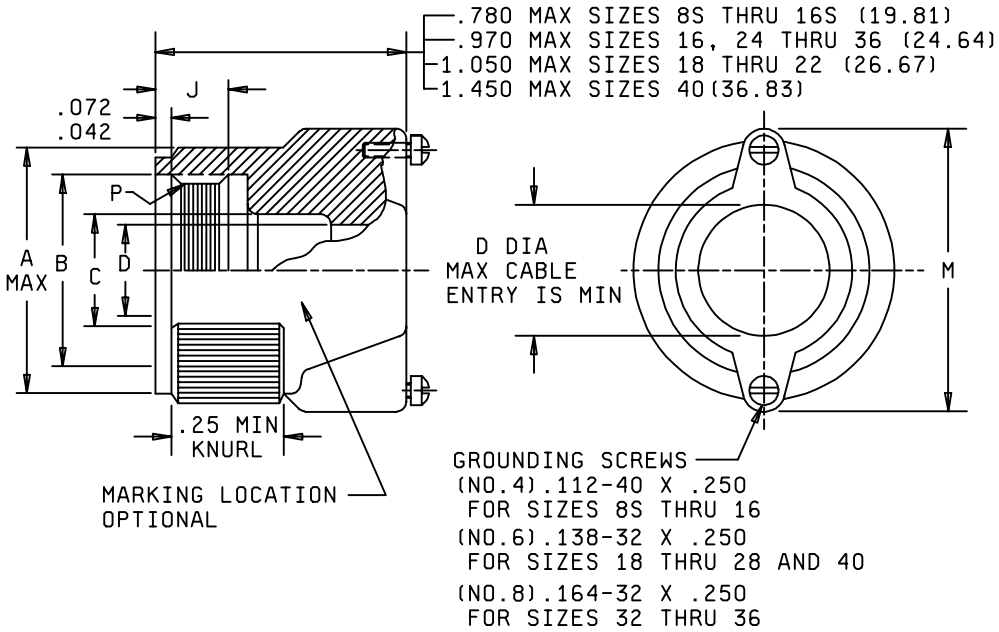

Inches	mm
.042	1.07
.072	1.83
.112	2.84
.138	3.51
.164	4.17
.250	6.35

NOTES:
1. Dimensions are in inches.
2. Metric equivalents are given for general information only.
3. Unless otherwise specified, tolerances are ± .005 (0.13 mm) for three place decimals, ± .010 (0.25 mm) for two place decimals, and angular tolerances X° = ± 1° 0′, X°X′ = ± 30′.
4. Dimensions apply after plating.
5. Remove all burrs and sharp edges.

FIGURE 2. Type N - no clamp.

Shell size	A Max dia	B dia	C dia	D dia	E max	J min	L max	M max	N max	P thread class 2B	Cable entry 3/	
											Fig. 1 max	Fig. 1 min
8	.585	.450 .440	.291 .281	.257 .245	1.290 (32.77)	.285	.843	.900 (22.86)	1.075	.438-28 UNEF	.235	.125
10	.645	.513 .503	.351 .341	.310 .300	1.290 (32.77)	.285	.843	.900 (22.86)	1.075	.500-28 UNEF	.235	.125
11	.730	.575 .565	.420 .410	.390 .380	1.290 (32.77)	.285	.906	.980 (24.89)	1.140	.562-24 UNEF	.297	.170
13 1/	.770	.640 .628	.471 .461	.415 .403	1.290 (32.77)	.285	1.085	.995 (25.27)	1.140	.625-24 UNEF	.297	.170
15 2/	.910	.765 .753	.575 .564	.497 .485	1.368 (34.75)	.285	1.093	1.160 (29.46)	1.360	.750-20 UNEF	.422	.235
17	1.035	.890 .878	.700 .690	.616 .604	1.430 (36.32)	.285	1.187	1.260 (32.00)	1.520	.875-20 UNEF	.547	.295
16	1.035	.890 .878	.700 .690	.616 .604	1.587 (40.31)	.440	1.275	1.260 (32.00)	1.520	.875-20 UNEF	.547	.295
18	1.170	1.015 1.003	.817 .807	.735 .725	1.695 (43.05)	.440	1.475	1.455 (36.96)	1.600	1.000-20 UNEF	.610	.325
20	1.300	1.140 1.128	.953 .943	.875 .865	1.695 (43.05)	.440	1.500	1.580 (40.13)	1.890	1.125-18 UNEF	.735	.380
22	1.420	1.265 1.255	1.083 1.073	.983 .973	1.695 (43.05)	.440	1.710	1.580 (40.13)	1.890	1.250-18 UNEF	.735	.380
24	1.535	1.390 1.378	1.190 1.180	1.095 1.085	1.931 (49.05)	.440	1.719	1.890 (48.01)	2.145	1.375-18 UNEF	.922	.500
28	1.800	1.640 1.628	1.410 1.400	1.255 1.245	1.931 (49.05)	.440	2.040	1.890 (48.01)	2.145	1.625-18 UNEF	.922	.500
32	2.035	1.890 1.878	1.664 1.654	1.525 1.515	1.869 (47.47)	.440	2.332	2.215 (56.26)	2.550	1.875-16 UN	1.235	.705
36	2.270	2.140 2.128	1.875 1.862	1.760 1.750	1.869 (47.47)	.440	2.312	2.405 (61.09)	2.889	2.125-16 UN	1.360	.725
40	2.780	2.395 2.385	2.208 2.198	2.020 1.865	2.875 (73.03)	.459	2.950	2.781 (70.64)	3.500	2.375-16 UN	1.630	.911

1/ Shell size 13 fits connector sizes 12 and 13.
2/ Shell sizes 14 and 15 fit connector sizes 14 and 16.
3/ “Cable entry” dimension is defined as the envelope area for the wire bundle. This dimension is not intended to define the clamp hardware limits.

FIGURE 2. Type N - no clamp - Continued.

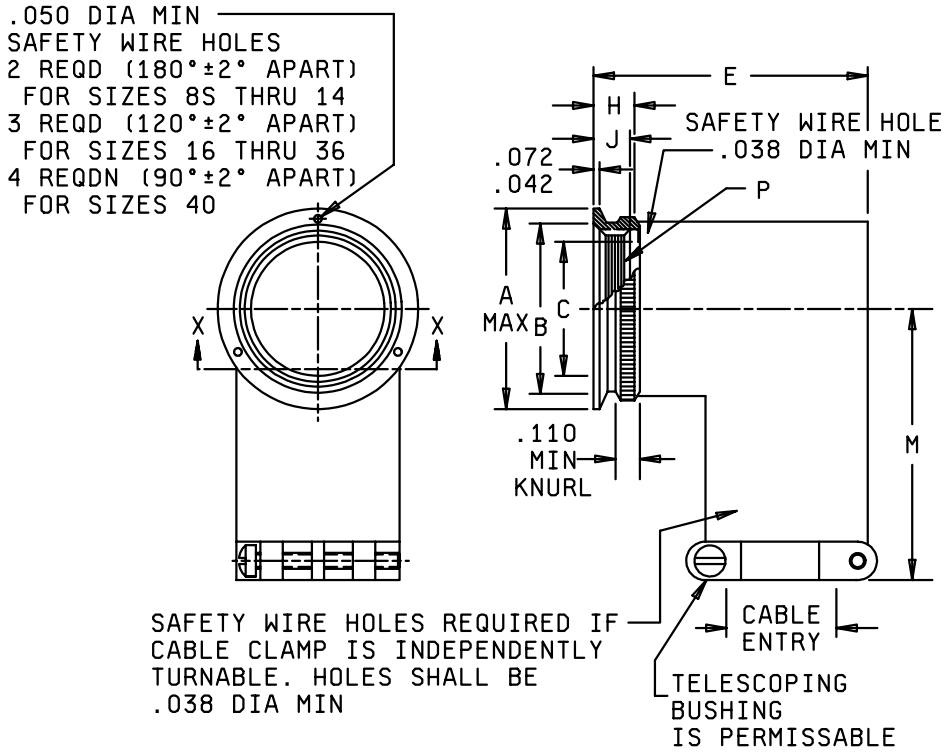

Inches	mm
.038	0.97
.042	1.07
.050	1.27
.072	1.83
.110	2.79

NOTES:
1. Dimensions are in inches.
2. Metric equivalents are given for general information only.
3. Unless otherwise specified, tolerances are ± .005 (0.13 mm) for three place decimals, ± .010 (0.25) for two place decimals, and angular tolerances X° = ± 1° 0′, X°X′ = ± 30′.
4. Dimensions apply after plating.
5. Remove all burrs and sharp edges.

FIGURE 3. Type A - 90° clamp.

Shell size	A max dia	B dia	C dia	E max	H max	J	M max	P thread class 2B	Cable entry 1/	
									Max	Min
8	.805	.455 .440	.300 .279	1.187 (30.15)	.350	.285 .272	1.220	.438-28 UNEF	.235	.102
10	.890	.520 .500	.360 .339	1.187 (30.15)	.350	.285 .272	1.250	.500-28 UNEF	.235	.102
11	.975	.580 .560	.430 .408	1.312 (33.32)	.350	.285 .272	1.280	.562-24 UNEF	.297	.140
13	1.005	.645 .625	.480 .459	1.312 (33.32)	.350	.285 .272	1.280	.625-24 UNEF	.297	.140
12	1.005	.645 .625	.480 .459	1.468 (37.29)	.505	.441 .428	1.280	.625-24 UNEF	.297	.140
15	1.130	.770 .750	.584 .562	1.437 (36.50)	.355	.285 .272	1.405	.750-20 UNEF	.422	.195
14	1.130	.770 .750	.584 .562	1.594 (40.49)	.510	.441 .428	1.405	.750-20 UNEF	.422	.195
17	1.255	.895 .875	.710 .688	1.531 (38.89)	.350	.285 .272	1.529	.875-20 UNEF	.547	.255
16	1.255	.895 .875	.710 .688	1.687 (42.85)	.510	.441 .428	1.529	.875-20 UNEF	.547	.255
18	1.350	1.020 1.000	.827 .805	1.765 (44.83)	.490	.441 .428	1.593	1.000-20 UNEF	.610	.285
20	1.475	1.145 1.125	.962 .942	2.000 (50.80)	.495	.441 .428	1.655	1.125-18 UNEF	.735	.350
22	1.600	1.270 1.250	1.095 1.073	2.000 (50.80)	.495	.441 .428	1.718	1.250-18 UNEF	.735	.350
24	1.725	1.395 1.375	1.202 1.180	2.265 (57.53)	.488	.423 .410	1.894	1.375-18 UNEF	.922	.468
28	1.975	1.645 1.625	1.423 1.401	2.265 (57.53)	.488	.423 .410	1.973	1.625-18 UNEF	.922	.468
32	2.225	1.895 1.875	1.674 1.652	2.578 (65.48)	.488	.423 .410	2.187	1.875-16 UN	1.235	.664
36	2.475	2.145 2.125	1.887 1.865	2.815 (71.50)	.488	.423 .410	2.405	2.125-16 UN	1.360	.694
40	2.750	2.390 2.375	2.125 2.117	5.800 (147.23)	.500	.423 .410	5.100	2.375-16 UN	1.630	.911

1/ "Cable entry" dimension is defined as the envelope area for the wire bundle. This dimension is not intended to define the clamp hardware limits.

FIGURE 3. Type A - 90° clamp - Continued.

REQUIREMENTS:

Material: Aluminum alloy in accordance with ASTM-B-85 Aluminum Alloy Die Castings, Stainless Steel in accordance with ASTM A967, Aluminum black anodize in accordance with MIL-A-8625.

Telescoping type bushing shall be capable of passing fluid and temperature requirements of the basic specification.

Part or Identifying Number (PIN) example:

M83723/ 35 A 22 R

Military designation

Specification sheet number

Type

S: Straight clamp
A: 90° clamp
N: No clamp

Shell size

Class

Material and finish

R: Aluminum, 200°C, conductive finish.
G: Stainless steel passivated, 200°C.
A: Aluminum black anodize, nonconductive, 200°C.

CONCLUDING MATERIAL

Custodians:
Army - CR
Navy - AS
Air Force - 11
DLA - CC

Review activity:
Air Force - 99

Preparing activity:
DLA - CC

(Project 5935-4281-01)