MILITARY SPECIFICATION SHEET

CONNECTORS, ELECTRICAL, (CIRCULAR, ENVIRONMENT RESISTING), RECEPTACLE, (CABLE CONNECTING, THREADED COUPLING, CRIMP PIN CONTACTS), (SERIES II, CLASSES A, G, AND R)

This specification sheet is approved for use by the Engineering and Technical Support Division (AFLC), Department of the Air Force, and is available for use by all Departments and Agencies of the Department of Defense.

The complete requirements for procuring the connector described herein shall consist of this document and the latest issue of Specification MIL-C-83723.

(B) INACTIVE: USE MS3451 OF MIL-C-5015

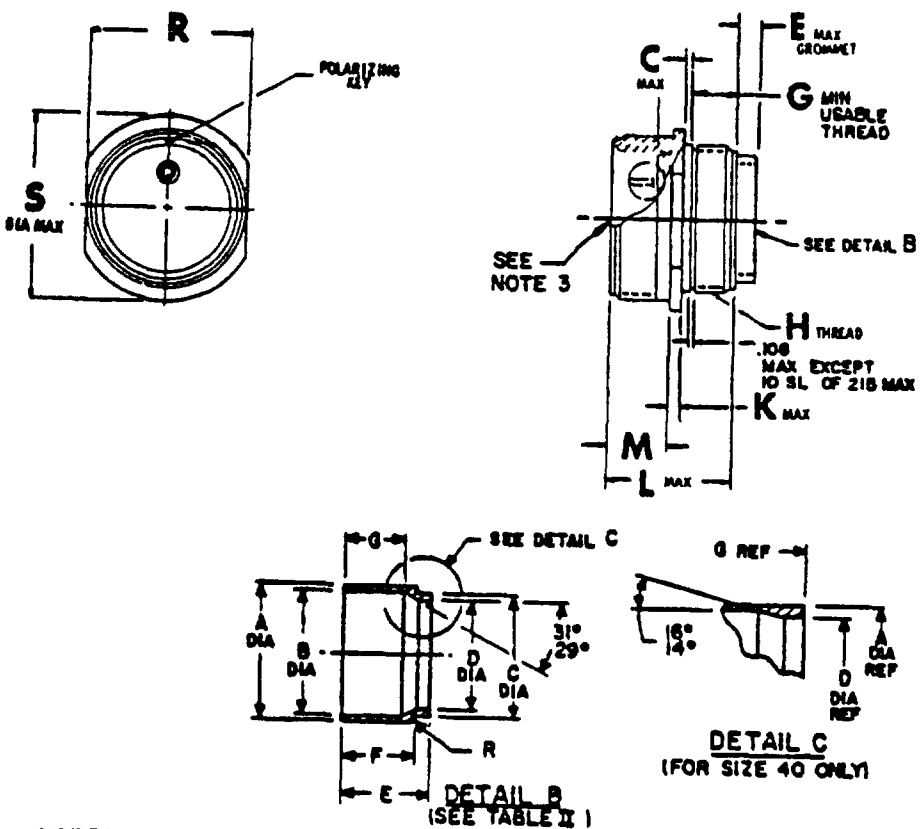

NOTES:
1. ALL DIMENSIONS ARE IN INCHES.
2. ALL DIMENSIONS ARE AFTER PLATING.
(B) 3. FOR DETAILS OF CONNECTOR FRONT END CONFIGURATION SEE PROCUREMENT SPECIFICATION.

(B) Denotes revision

FSC 5935

Ⓑ TABLE I. CONNECTOR DIMENSIONS

SHELL SIZE PART NO DESIGNATION	MIL-C-5015 SIZE SHELL	C MAX	1/ E MAX	G	H THREAD CLASS 2A	K MAX	L MAX	M	R	S
08	8S	.056	.400	.375	.438-28 UNEF	.11	1.135	.577 .562	.504 496	.729 .709
10	10S	.056	.400	↑	.500-28 ↑	.11	↑	↑	.629 .621	.854 .834
11	10SL	.056	.400		.562-24	.11	↓	↓	.629 .621	.849 839
13	12S	.041	.400		.625-24	.13	1.135	.577 562	.754 .746	.974 964
12	12	.072	.317		.625-24	↑	1.495	.765 .750	.754 746	974 964
15	14S	.041	.400		.750-20		1.135	.577 .562	.879 .871	1.099 1.089
14	14	.072	.317		.750-20		1.495	765 .750	879 .871	1.099 1.089
17	16S	.041	.400	↓	.875-20	↓	1.135	.577 .562	1.004 .996	1.224 1.214
16	16	.072	.317	.375	.875-20	.13	1.495	.765 .750	1.004 .996	1.224 1.214
18	18	.072	.380	.500	1.000-20	.16	↑	↑	1.129 1.121	1.349 1.339
20	20	.056	.380	↑	1.125-18	↑	↓	↓	1.254 1.246	1.474 1.464
22	22	.056	.380		1.250-18		1.495	.765 .750	1.379 1.371	1.599 1.589
24	24	.041	.315	↓	1.375-18 ↓		1.556	.827 .812	1.504 1.496	1.715 1.705
28	28	.041	.315	.500	1.625-18 UNEF		1.556	.827 .812	1.754 1.746	1.974 1.964
32	32		.260	.531	1.875-16 UN		1.620	.890 875	2.004 1.996	2.224 2.214
36	36		.260	.531	2.125-16 UN	↓	1.620	.890 .875	2.254 2.246	2.474 2.464
40	40		.260	.531	2.375-16 UN	.16	1.620	.890 .875	2.510 2.500	2.724 2.714

1/ When insulator arrangement sizes 18 thru 40 contain one or more size No. 0 contacts, E dimension will increase .150 max.

TABLE II. DETAIL B DIMENSIONS

SHELL SIZE	A	B	C	D	E	F	G	R
8S	.280 271	.250 237	.245 .232	.180 167	427 .401	342 326	286 276	
10S	.340 .332	.312 299	.298 285	242 229	.420 397	335 322	272 262	
10SL	409 .401	.380 367	.378 365	310 297	430 .407	335 .322	237 227	
12 & 12S	.460 .452	432 419	403 .390	355 342	418 .396	340 326	270 260	
14 & 14S	563 .550	518 .505	485 472	448 435	.414 391	339 326	261 .251	.040 020
16 & 16S	.689 .676	644 631	605 .592	574 561	424 401	.339 326	.266 256	.040 .020
18	806 .793	760 747	725 712	690 677	.574 551	449 436	371 361	.060 040
20	.941 .928	.894 .881	863 850	814 801	573 550	458 445	385 375	
22	1.059 1.046	982 969	973 .960	902 889	551 528	456 443	389 379	
24	1 170 1.157	1 106 1.093	1 085 1.072	1 026 1 013	547 524	457 444	385 375	
28	1 401 1 388	1.330 1.317	1.245 1.232	1 185 1 172	573 550	458 445	329 319	
32	1.652 1.639	1 608 1.595	1.515 1.502	1 440 1 427	544 521	459 446	316 306	
36	1.860 1.847	1.796 1.783	1.751 1.738	1.653 1 640	573 550	463 450	355 345	060 040
40	2.105 2.092	2.000 1.989		1 905 1 892	823 800		379 279	

REQUIREMENTS:

Dimensions and configuration: See figure.

This receptacle mates with MIL-C-83723/23(USAF).

(B) For insert arrangements see MIL-STD-1651.

Rear hardware per MIL-C-83723/27, /35, or /50(USAF) must be used for correct wire sealing.

(B) Insert positions and alternate rotations: The letter N indicates normal (or standard) insert position. Alternate positions are identified in MIL-STD-1651.

Part number example:

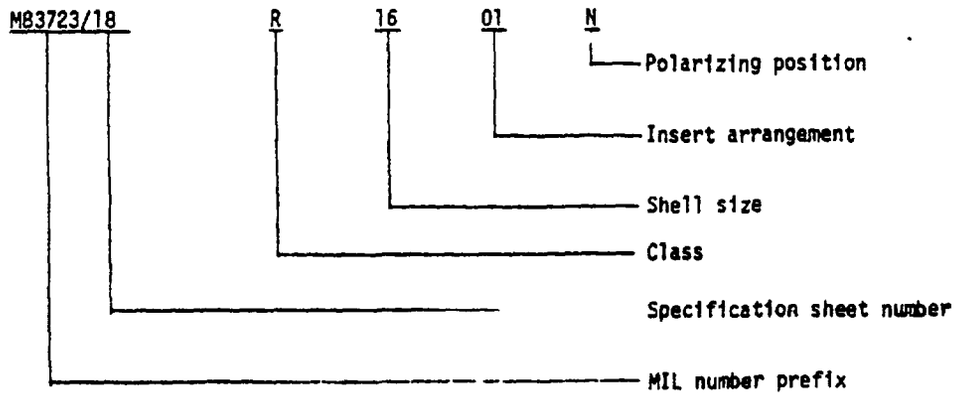

Custodian:
Air Force - 85

Review activities:
Air Force - 11, 15, 17, 99

Preparing activity:
Air Force - 85

(Project 5935-F024-2)

STANDARDIZATION DOCUMENT IMPROVEMENT PROPOSAL

OMB Approval No. 22-R255

INSTRUCTIONS: The purpose of this form is to solicit beneficial comments which will help achieve procurement of suitable products at reasonable cost and minimum delay, or will otherwise enhance use of the document. DoD contractors, government activities, or manufacturers/vendors who are prospective suppliers of the product are invited to submit comments to the government. Fold on lines on reverse side, staple in corner, and send to preparing activity. Comments submitted on this form do not constitute or imply authorization to waive any portion of the referenced document(s) or to amend contractual requirements. Attach any pertinent data which may be of use in improving this document. If there are additional papers, attach to form and place both in an envelope addressed to preparing activity.

DOCUMENT IDENTIFIER AND TITLE

MIL-C-83723/18B (USAF) Connectors, Electrical, (Circular, Environment Resisting

NAME OF ORGANIZATION AND ADDRESS

CONTRACT NUMBER FSC 5935

MATERIAL PROCURED UNDER A

☐ DIRECT GOVERNMENT CONTRACT ☐ SUBCONTRACT

1. HAS ANY PART OF THE DOCUMENT CREATED PROBLEMS OR REQUIRED INTERPRETATION IN PROCUREMENT USE?

A. GIVE PARAGRAPH NUMBER AND WORDING

B. RECOMMENDATIONS FOR CORRECTING THE DEFICIENCIES

2. COMMENTS ON ANY DOCUMENT REQUIREMENT CONSIDERED TOO RIGID

3. IS THE DOCUMENT RESTRICTIVE?

☐ YES ☐ NO *(If "Yes", in what way?)*

4. REMARKS

SUBMITTED BY *(Printed or typed name and address - Optional)*

TELEPHONE NO

DATE

DD FORM 1 JAN 72 1426

REPLACES EDITION OF 1 JAN 68 WHICH MAY BE USED

C16061

FOLD

OFFICIAL BUSINESS
PENALTY FOR PRIVATE USE $300

POSTAGE AND FEES PAID
DEPARTMENT OF THE AIR FORCE
DoD-318

U.S. MAIL

AFLC/LOIE/Standardization
Wright-Patterson AFB OH 45433

FOLD