MILITARY SPECIFICATION SHEET

CONNECTORS, ELECTRICAL, (CIRCULAR, ENVIRONMENT RESISTING), RECEPTACLE, (WALL MOUNT, THREADED COUPLING, CRIMP PIN CONTACTS), (SERIES II, CLASSES A, G, K, AND R)

This specification sheet is approved for use by the Engineering and Technical Support Division (AFLC), Department of the Air Force, and is available for use by all Departments and Agencies of the Department of Defense

The complete requirements for procuring the connector described herein shall consist of this document and the latest issue of Specification MIL-C-83723

© INACTIVE USE MS3450 OF MIL-C-5015

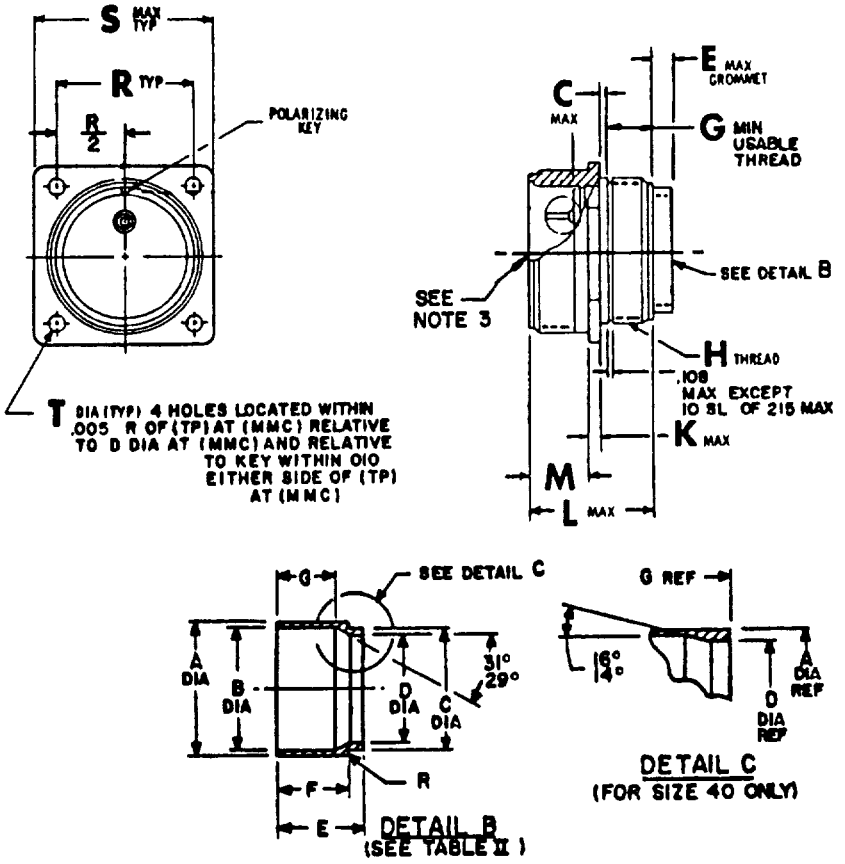

NOTES:

1. ALL DIMENSIONS ARE IN INCHES.
2. ALL DIMENSIONS ARE AFTER PLATING.
3. © FOR DETAILS OF CONNECTOR FRONT END CONFIGURATION SEE PROCUREMENT SPECIFICATION.

© Denotes revision

FSC 5935

© TABLE I. CONNECTOR DIMENSIONS.

SHELL SIZE PART NO. DESIGNATION	MIL-C-5015 SIZE SHELL	C	1/ E MAX	G MAX	H THREAD CLASS 2A	K MAX	L MAX	M	R BSC	S MAX	T
08	8S	.056	.400	.375	.4375-28 UNEF	.110	1.135	.577 .562	.594	.906	.130 .115
10	10S	.056	↑	↑	.500-28 ↑	.110	↑	↑	.719	1.031	↑
11	10SL	.056	↓		.5625-24	.110	↓	↓	.719	1.031	
13	12S	.041	.400		.625-24	.130	1.135	.577 .562	.812	1.125	
12	12	.072	.317		.625-24	↑	1.495	.765 .750	.812	1.125	
15	14S	.041	.400		.750-20		1.135	.577 .562	.906	1.219	
14	14	.072	.317		.750-20		1.495	.765 .750	.906	1.219	
17	16S	.041	.400	↓	.875-20	↓	1.135	.577 .562	.969	1.312	
16	16	.072	.317	.375	.875-20	.130	1.495	.765 .750	.969	1.312	
18	18	.072	.380	.500	1.000-20	.160	↑	↑	1.062	1.406	
20	20	.056	.380	↑	1.125-18	↑	↓	↓	1.156	1.531	↓
22	22	.056	.380		1.250-18		1.495	.765 .750	1.250	1.656	.130 .115
24	24	.041	.315	↓	1.375-18 ↓		1.556	.827 .812	1.375	1.781	.157 .142
28	28	.041	.315	.500	1.625-18 UNEF		1.556	.827 .812	1.562	2.031	.157 .142
32	32	/	.260	.531	1.875-16 UN		1.620	.890 .875	1.750	2.281	.183 .168
36	36	/	.260	.531	2.125-16 UN	↓	1.620	.890 .875	1.938	2.531	.183 .168
40	40	/	.260	.531	2.375-16 UN	.160	1.620	.890 .875	2.188	2.781	.183 .168

1/ When insulator arrangement sizes 18 thru 40 contain one or more size No. 0 contacts E dimension will increase .150 max.

TABLE II DETAIL B DIMENSIONS

SHELL SIZE	A	B	C	D	E	F	G	R
8S	280 271	250 .237	.245 232	180 .167	427 .401	342 326	286 .276	
10S	340 332	312 .299	298 .285	.242 229	420 397	335 322	272 .262	
10SL	.409 401	380 .367	378 365	310 297	430 .407	335 .322	237 .227	
12 & 12S	460 452	432 419	403 390	.355 .342	419 396	340 326	.270 260	
14 & 14S	563 550	518 505	485 .472	448 435	414 391	.339 326	.261 251	040 020
16 & 16S	689 676	644 631	605 592	574 561	424 401	339 326	266 256	.040 020
18	806 793	760 747	725 712	690 677	.574 551	449 436	371 361	060 040
20	941 928	.894 .881	863 850	814 801	573 550	458 445	385 375	
22	1 059 1.046	982 969	973 960	902 889	551 528	456 443	389 379	
24	1 170 1 157	1 106 1.093	1 085 1 072	1 026 1 013	547 524	457 444	385 .375	
28	1 401 1.388	1 330 1 317	1 245 1 232	1 185 1 172	573 550	458 445	329 319	
32	1 652 1639	1 608 1 595	1.515 1 502	1 440 1 427	544 521	.459 446	316 .306	
36	1.860 1.847	1 796 1 783	1 751 1.738	1 653 1.640	573 550	463 450	355 345	060 .040
40	2.105 2 092	2.000 1.989		1 905 1 892	823 800		379 279	

REQUIREMENTS

Dimensions and configuration See figure

This receptacle mates with MIL-C-83723/23(USAF)

Ⓒ For insert arrangements see MIL-STD-1651.

Rear hardware per MIL-C-83723/27, /35, or /50(USAF) must be used for correct wire sealing

Ⓒ Insert positions and alternate rotations. The letter N indicates normal (or standard) insert position Alternate positions are identified in MIL-STD-1651

Part number example

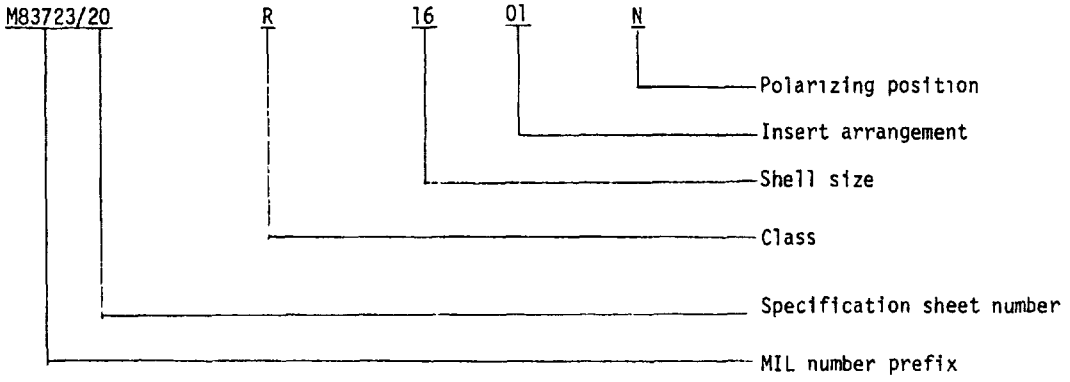

Custodian.
Air Force - 85

Review activities.
Air Force - 11, 15, 17, 99

Preparing activity
Air Force - 85

(Project 5935-F024-4)

STANDARDIZATION DOCUMENT IMPROVEMENT PROPOSAL

OMB Approval
No 22-R255

INSTRUCTIONS The purpose of this form is to solicit beneficial comments which will help achieve procurement of suitable products at reasonable cost and minimum delay, or will otherwise enhance use of the document. DoD contractors, government activities, or manufacturers/ vendors who are prospective suppliers of the product are invited to submit comments to the government Fold on lines on reverse side, staple in corner, and send to preparing activity Comments submitted on this form do not constitute or imply authorization to waive any portion of the referenced document(s) or to amend contractual requirements Attach any pertinent data which may be of use in improving this document If there are additional papers, attach to form and place both in an envelope addressed to preparing activity.

DOCUMENT IDENTIFIER AND TITLE

MIL-C-83723/20C (USAF) Connectors, Electrical, (Circular, Environment Resisting)

NAME OF ORGANIZATION AND ADDRESS

CONTRACT NUMBER FSC 5935

MATERIAL PROCURED UNDER A

☐ DIRECT GOVERNMENT CONTRACT ☐ SUBCONTRACT

1. HAS ANY PART OF THE DOCUMENT CREATED PROBLEMS OR REQUIRED INTERPRETATION IN PROCUREMENT USE?

A GIVE PARAGRAPH NUMBER AND WORDING

B RECOMMENDATIONS FOR CORRECTING THE DEFICIENCIES

2 COMMENTS ON ANY DOCUMENT REQUIREMENT CONSIDERED TOO RIGID

3 IS THE DOCUMENT RESTRICTIVE?

☐ YES ☐ NO *(If "Yes", in what way?)*

4 REMARKS

SUBMITTED BY *(Printed or typed name and address - Optional)*

TELEPHONE NO

DATE

DD FORM 1 JAN 72 1426

REPLACES EDITION OF 1 JAN 66 WHICH MAY BE USED

C16061

FOLD

OFFICIAL BUSINESS
PENALTY FOR PRIVATE USE $300

POSTAGE AND FEES PAID
DEPARTMENT OF THE AIR FORCE
DoD-318

U.S.MAIL

AFLC/LOIE/STandardization
Wright-Patterson AFB OH 45433

FOLD