MILITARY SPECIFICATION SHEET

CONNECTORS, ELECTRICAL, (CIRCULAR, ENVIRONMENT RESISTING), RECEPTACLE, (BOX MOUNT, THREADED COUPLING, CRIMP SOCKET CONTACTS), (SERIES II, CLASSES A, G, AND R)

This specification sheet is approved for use by the Engineering and Technical Support Division (AFLC), Department of the Air Force, and is available for use by all Departments and Agencies of the Department of Defense.

The complete requirements for procuring the connector described herein shall consist of this document and the latest issue of Specification MIL-C-83723.

(B) INACTIVE: USE MS3452 OF MIL-C-5015

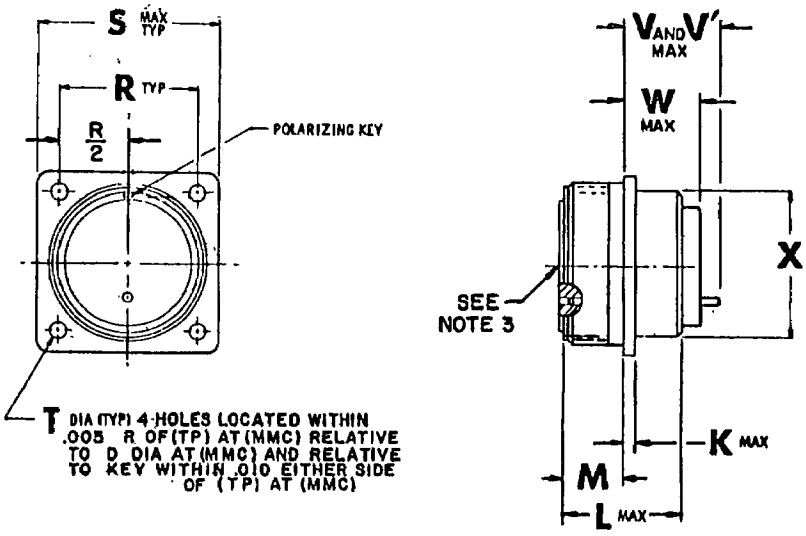

NOTES:
1. ALL DIMENSIONS ARE IN INCHES.
2. ALL DIMENSIONS ARE AFTER PLATING.
(B) 3. FOR DETAILS OF CONNECTOR FRONT END CONFIGURATION SEE PROCUREMENT SPECIFICATION.

(B) Denotes revision

FSC 5935

Ⓑ TABLE I. CONNECTOR DIMENSIONS.

SHELL SIZE PART NO. DESIGNATION	MIL-C-5015 SIZE SHELL	K MAX	L MAX	M	R BSC	S MAX	X MAX	T	1/ V SIZE 0	V' SIZE 8 & 4	1/ W MAX
08	8S	.100	.943	.578 .562	.594	.906	.449	.130 .115			.557
10	10S	.100	.943		.719	1.031	.509				.557
11	10SL	.115	1.065		.719	1.031	.625				.521
13	12S	.100	.960	.578 .562	.812	1.125	.625				.557
12	12		1.150	.766 .750	.812	1.125	.625				.625
15	14S		.960	.578 .562	.906	1.218	.750				.557
14	14		1.150	.766 .750	.906	1.218	.750				.625
17	16S		.960	.578 .562	.969	1.312	.875				.557
16	16	.100	1.150	.766 .750	.969	1.312	.875			.790	.625
18	18	.140	1.130		1.062	1.406	.984		.915	.790	.640
20	20		1.161		1.156	1.531	1.171		.915	.790	.640
22	22		1.161	.766 .750	1.250	1.656	1.265	.130 .115	.915	.790	.640
24	24		1.317	.828 .812	1.375	1.781	1.390	.157 .142	.853	.728	.578
28	28	.140		.828 .812	1.562	2.031	1.640	.157 .142	.853	.728	.578
32	32	.170		.891 .875	1.750	2.281	1.890	.183 .168	.790	.655	.515
36	36	170	1.317	.891 .875	1.938	2.531	2.140	.183 .168	.790	.655	.515
40	40	.170	1.348	.891 .875	2.188	2.781	2.359	.183 .168	.790	.655	.515

1/ When insulator arrangement sizes 18 thru 40 contain one or more size No. 0 contacts, V and W dimension will increase .150 max.

REQUIREMENTS:

Dimensions and configuration: See figure.

This receptacle mates with MIL-C-83723/24(USAF).

(B) For insert arrangements see MIL-STD-1651.

(B) Insert positions and alternate rotations: The letter N indicates normal (or standard) insert position. Alternate positions are identified in MIL-STD-1651.

Part number example:

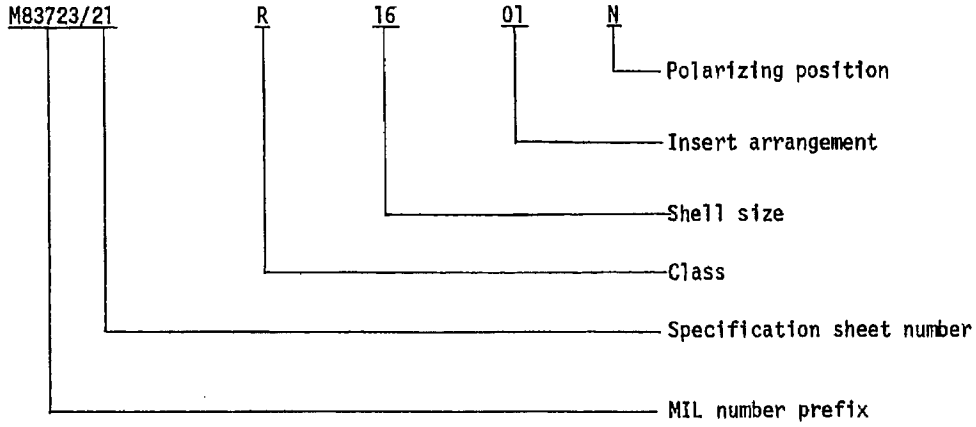

Custodian:
Air Force - 85

Review activities:
Air Force - 11, 15, 17, 99

Preparing activity:
Air Force - 85

(Project 5935-F024-5)