INCH - POUND

MIL-C-83723/68A(USAF)
17 December 1991
SUPERSEDING
MIL-C-83723/68(USAF)
8 May 1975

MILITARY SPECIFICATION SHEET

(A) CONNECTORS, ELECTRICAL, (CIRCULAR, ENVIRONMENT RESISTING), PLUG, THREADED COUPLING, (PUSH-PULL, QUICK-DISCONNECT WITH LANYARD), CRIMP PIN CONTACT, SERIES III, CLASS A, G, R, AND W)

(A) This specification is approved for use by the Department of the Air Force, and is available for use by all Departments and Agencies of the Department of Defense.

(A) The requirements for acquiring the product described herein shall consist of this specification sheet and the issue of following specification listed in that issue of the Department of Defense Index of Specifications and Standards (DODISS) specific in the solicitation: MIL-C-83723.

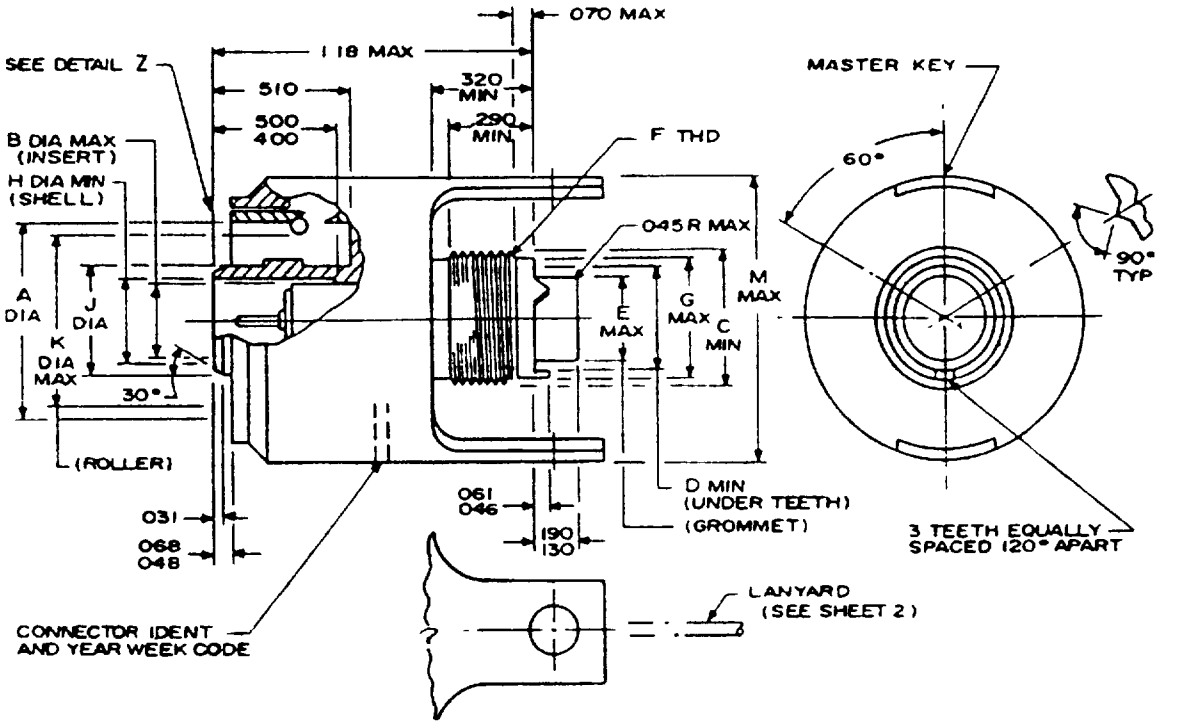

FIGURE 1. Dimensions and configurations.

(A) denotes changes

DISTRIBUTION STATEMENT A. Approved for public release; distribution is unlimited.

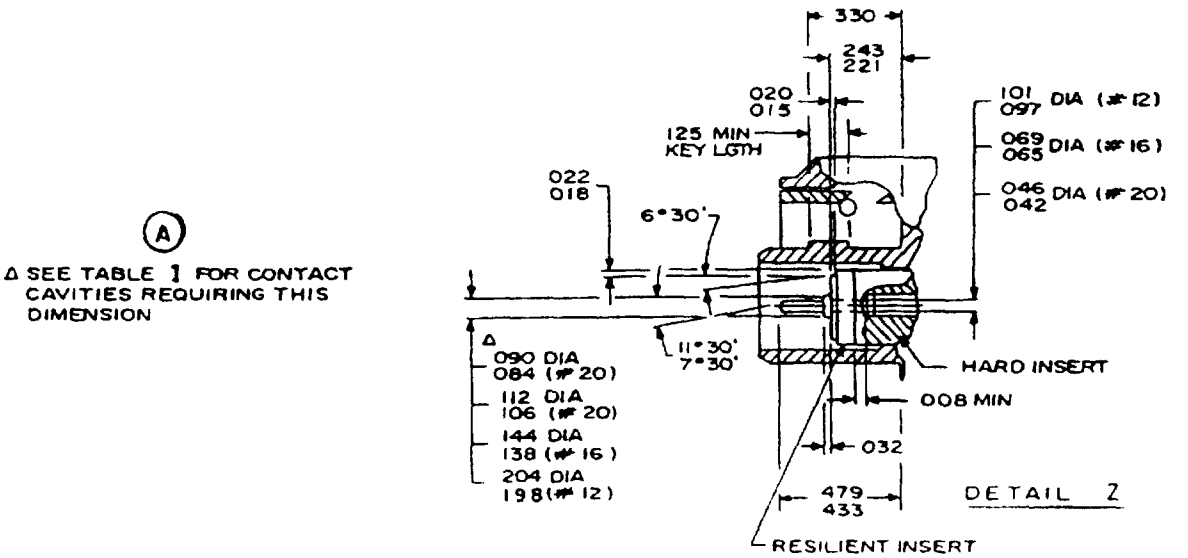

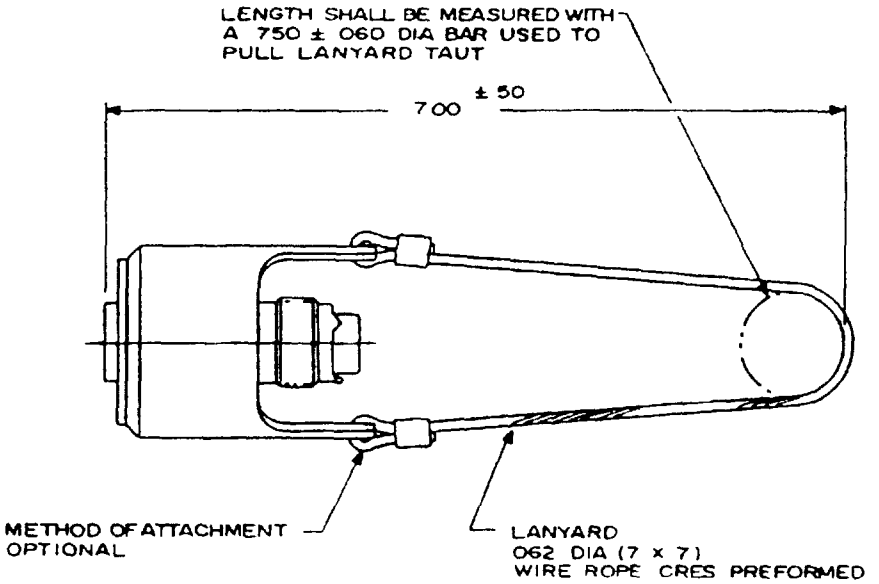

FIGURE 1. Dimensions and configurations - Continued.

Connector dimensions.

Shell size	A	B	C	D	E	F thread	G	H
8	.704	.290	.470	.370	.305	.500-20 UNF-2A	.437	.294
10	.829	.388	.600	.497	.405	.625-24 UNEF-2A	.572	.428
12	1.016	.558	.724	.613	.531	.750-20 UNEF-2A	.687	.598
14	1.079	.627	.849	.738	.665	.875-20 UNEF-2A	.812	.667
16	1.204	.772	.974	.863	.790	1.000-20 UNEF-2A	.937	.794
18	1.345	.860	1.030	.919	.869	1.0625-18 UNEF-2A	.992	.900
20	1.470	.985	1.154	1.044	.994	1.1875-18 UNEF-2A	1.117	1.025
22	1.595	1.110	1.279	1.169	1.119	1.3125-18 UNEF-2A	1.242	1.150
24	1.720	1.235	1.404	1.294	1.244	1.4375-18 UNEF-2A	1.367	1.275

FIGURE 1. Dimensions and configurations - Continued.

Connector dimensions - Continued.

Shell size	J	K	M
8	.405 .396	.612	1.095
10	.526 .517	.737	1.240
12	.696 .687	.925	1.432
14	.765 .756	.987	1.490
16	.892 .883	1.112	1.711
18	.998 .989	1.237	1.815
20	1.123 1.114	1.362	1.962
22	1.248 1.239	1.487	2.070
24	1.373 1.364	1.612	2.195

FIGURE 1. Dimensions and configurations - Continued.

Inches	mm	Inches	mm	Inches	mm	Inches	mm	Inches	mm
.015	0.38	.225	5.72	.600	15.24	.898	22.81	1.235	31.37
.018	0.46	.243	6.17	.612	15.54	.900	22.86	1.237	31.42
.020	0.51	.282	7.16	.613	15.57	.919	23.34	1.239	31.47
.022	0.56	.285	7.24	.625	15.88	.925	23.50	1.240	31.50
.031	0.79	.290	7.37	.627	15.93	.937	23.80	1.242	31.55
.032	0.81	.294	7.47	.643	16.33	.974	24.74	1.248	31.70
.042	1.07	.305	7.75	.646	16.41	.985	25.02	1.275	32.39
.045	1.14	.320	8.13	.665	16.89	.987	25.07	1.279	32.49
.046	1.17	.367	9.32	.667	16.94	.992	25.20	1.294	32.87
.048	1.22	.370	9.40	.687	17.45	.994	25.25	1.313	33.34
.054	1.37	.378	9.60	.696	17.68	.998	25.35	1.345	34.16
.061	1.55	.388	9.86	.704	17.88	1.000	25.40	1.362	34.59
.065	1.65	.396	10.06	.705	17.91	1.016	25.81	1.364	34.65
.068	1.73	.400	10.16	.708	17.98	1.025	26.04	1.367	34.72
.069	1.75	.402	10.21	.724	18.39	1.044	26.52	1.373	34.87
.070	1.78	.428	10.87	.730	18.44	1.063	27.00	1.432	36.37
.081	2.06	.433	11.00	.737	18.72	1.079	27.40	1.438	36.51
.084	2.13	.437	11.10	.738	18.75	1.090	27.69	1.470	37.34
.087	2.21	.465	11.81	.750	19.05	1.095	27.81	1.487	37.77
.090	2.29	.468	11.89	.756	19.20	1.110	28.19	1.490	37.85
.097	2.46	.470	11.94	.765	19.43	1.112	28.24	1.595	40.51
.101	2.57	.479	12.17	.772	19.61	1.114	28.40	1.612	40.94
.106	2.69	.481	12.22	.790	20.07	1.117	28.37	1.711	43.46
.112	2.84	.497	12.62	.794	20.17	1.119	28.42	1.720	43.69
.118	3.00	.500	12.70	.812	20.62	1.123	28.52	1.815	46.10
.130	3.30	.510	12.95	.829	21.06	1.130	28.70	1.962	49.83
.138	3.51	.526	13.36	.849	21.56	1.150	29.21	2.070	52.58
.144	3.66	.531	13.49	.860	21.84	1.154	29.31	2.129	56.62
.190	4.38	.558	14.17	.863	21.92	1.169	29.69	2.195	55.75
.198	5.03	.572	14.53	.869	22.07	1.180	30.16	2.353	59.77
.204	5.18	.580	14.73	.875	22.23	1.188	32.89		
.221	5.61	.583	14.81	.883	22.43	1.204	30.58		
.222	5.64	.598	15.19	.892	22.66	1.224	31.09		

NOTES:

1. Dimensions are in inches.
2. Metric equivalents are given for general information only.
3. Unless otherwise specified, tolerance shall be .XX +.010 and .XX +.005, angular, X° +1°0 ' and X°X' +30'.
4. The dimensions showing relationship of coupling ring to shell apply only when coupling ring is in full forward position.
5. The quick-disconnect connector plug is intended to be used with series III threaded coupling receptacle (MIL-C-83723/82 and /84) with adapter (MIL-C-83723/70) permanently attached to the receptacle.
6. Coupling of the quick-disconnect plug connector is to be accomplished by a straight axial push with no cocking of the coupling mechanism.
7. Uncoupling of the quick-disconnect plug connector is to be accomplished by a straight axial pull on the outer coupling ring.

FIGURE 1. Dimensions and configurations - Continued.

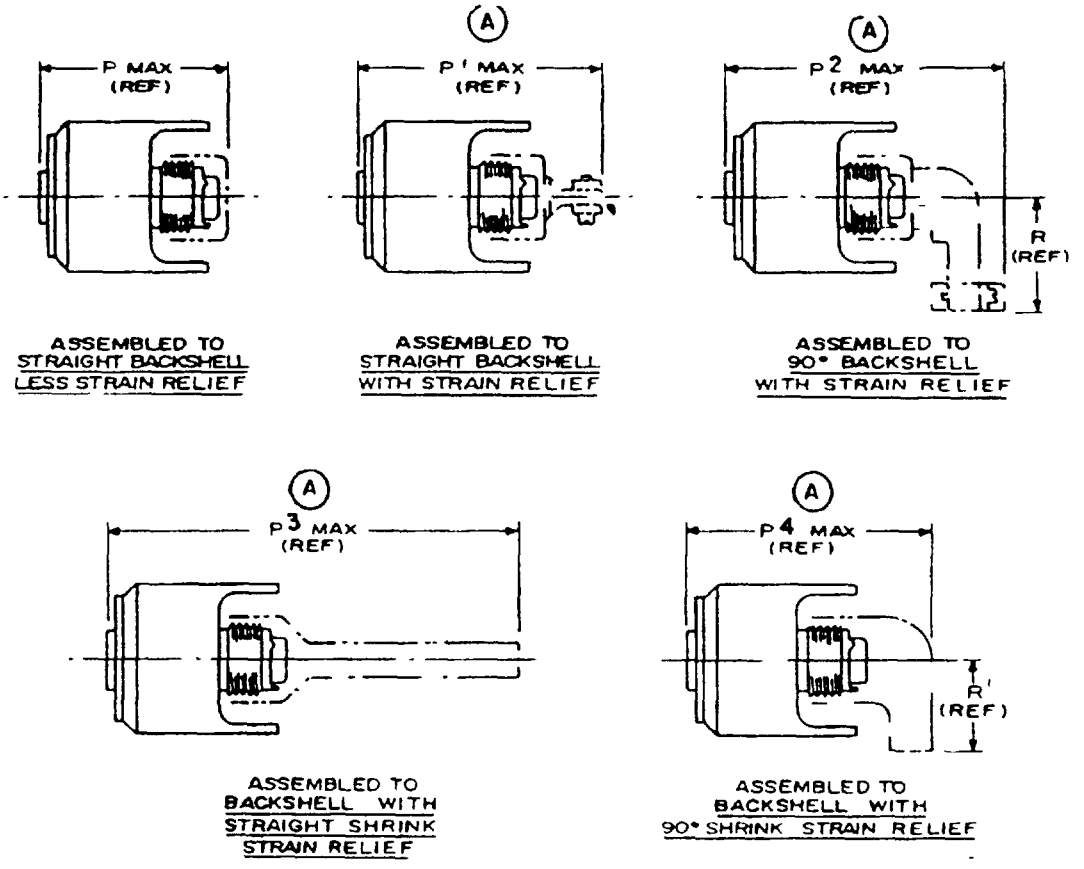

FIGURE 2. Backshell.

Backshell dimensions.

Shell size	P	P1	P2	P3	P4	R	R1
8	1.457	1.869	2.018	5.838	1.848	.830	4.585
10	1.457	1.979	2.100	6.528	1.888	.880	5.390
12	1.457	2.124	2.293	7.348	1.928	.950	6.330
14	1.457	2.124	2.353	7.348	1.928	1.010	6.330
16	1.457	2.229	2.502	8.068	2.028	1.070	6.710
18	1.457	2.474	2.614	8.068	2.028	1.130	6.710
20	1.457	2.604	2.739	9.068	2.148	1.190	7.740
22	1.457	2.729	2.864	9.068	2.148	1.260	7.740
24	1.457	2.854	2.989	9.068	2.228	1.320	8.030

Inches	mm	Inches	mm	Inches	mm
.830	21.08	2.018	51.26	2.864	72.49
.880	22.35	2.028	51.51	2.989	72.75
.950	24.13	2.100	53.34	4.585	116.46
1.010	25.65	2.124	53.95	5.390	136.91
1.030	26.16	2.148	54.56	5.838	148.29
1.070	27.18	2.228	56.59	6.330	160.78
1.090	30.23	2.229	56.62	6.528	165.81
1.260	32.00	2.293	58.24	6.710	170.43
1.320	33.53	2.474	62.84	7.438	186.64
1.457	37.01	2.502	63.55	7.440	196.60
1.848	46.10	2.604	66.14	8.030	203.96
1.869	47.47	2.614	66.40	8.068	204.93
1.888	47.96	2.729	69.37	9.068	230.32
1.922	48.97	2.739	69.57		
1.979	50.27	2.854	72.49		

NOTES:
1. Dimension are in inches.
2. Metric equivalents are given for general information only.
3. Unless otherwise specified, tolerance shall be .XX +.010 and .XX +.005, angular, X° +1°0 ' and X°X' +30'.

FIGURE 2. Backshell - Continued.

REQUIREMENTS:

(A) Dimensions and configuration: See figure 1 and 2.

(A) For insert arrangements See MIL-STD-1554 and table I.

Table I. Insert arrangemaents requiring reduced diameters for raised seal barriers on the outer row of the contact cavities.

Shell size	Insert arrangements	Contact cavities
8	(A) C3	1, 2, and 3

(A) For connector accessories See MIL-C-85049 and MIL-C-83723/16 (USAF).

(A) Unless otherwise specified in the purchase order.

a. Contacts shall be furnished with the connector. The total quantity shall include 10% or 1, whichever is greater, spare contacts of each size contacts used. See MIL-C-39029.
b. Grommet seal plugs shall be furnished with the connector. Total quantity shall be 15% of each contact size or 3, whichever is greater. See MS27488.
c. The insert/extraction tool for each size contact shall be included in the connector package. See MIL-I-81969.

(A) Connector assembly must included a backshell to meet the moisture sealing requirements. See MIL-C-85049 and MIL-C-83723/16(USAF).

The coupling mechanism of the connector plug shall withstand a minimum tensile load of 100 lbs. Load to be applied to rear accesory hardware in a straight axial direction.

The quick-disconnect connector plug shall meet the vibration and shock requirements in accordance with MIL-C-83723 and the coupling mechanism shall maintain the plug and receptacle in a locked condition.

The tensile force required to unlock the coupling mechanism shall be 5 lbs minimum and 20 lbs maximum.

Locking mechanism as required to meet performance requirements of MIL-C-83723.

(A) Part or Identifying Number (PIN) example:

	M	83723/68	W	22	55	N
Military designation						
Specification sheet number						
Class						
Shell size						
Insert arrangement						
Polarizing position						

CONCLUDING MATERIAL

Custodians:
Air Force - 85

Review activities:
Air Force - 11, 70, 80, 84
DLA - ES

Preparing activity
Air Force - 85

Agent:
DLA - ES

(Project 5935-F360-04)