INCH-POUND

MIL-C-83723/83D
30 June 1992

SUPERSEDING
MIL-C-83723/83C
6 July 1983

MILITARY SPECIFICATION SHEET

CONNECTORS, ELECTRICAL, (CIRCULAR, ENVIRONMENT RESISTING), RECEPTACLE, (FLANGE MOUNT, THREADED COUPLING, CRIMP PIN CONTACT), (SERIES III, CLASSES A, G, K, N, R, S, AND W)

This specification is approved for use by all Departments and Agencies of the Department of Defense.

(D) The complete requirements for acquiring the product described herein shall consist of this specification sheet and the issue of the following specification listed in that issue of the Department of Defense Index of Specifications and Standards (DODISS) specified in the solicitation: MIL-C-83723.

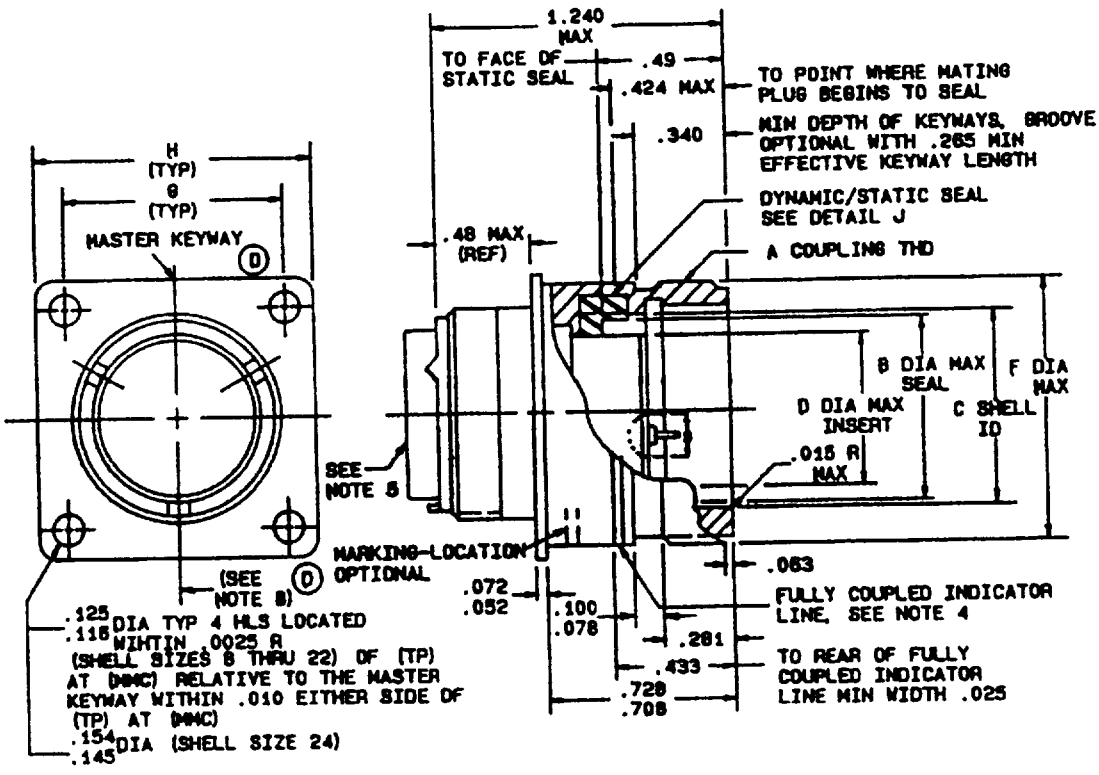

FIGURE 1. Classes A, G, K, R, and W.

(D) denotes changes

DISTRIBUTION STATEMENT A. Approved for public release; distribution is unlimted.

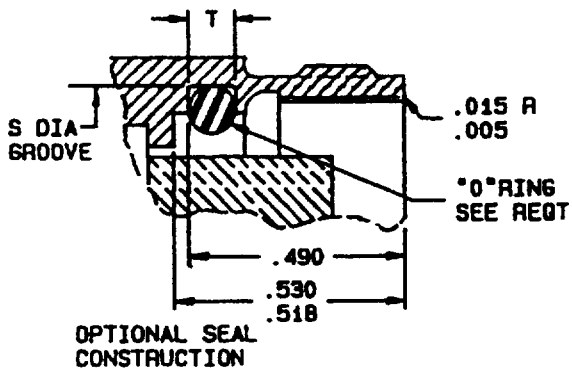

DETAIL J

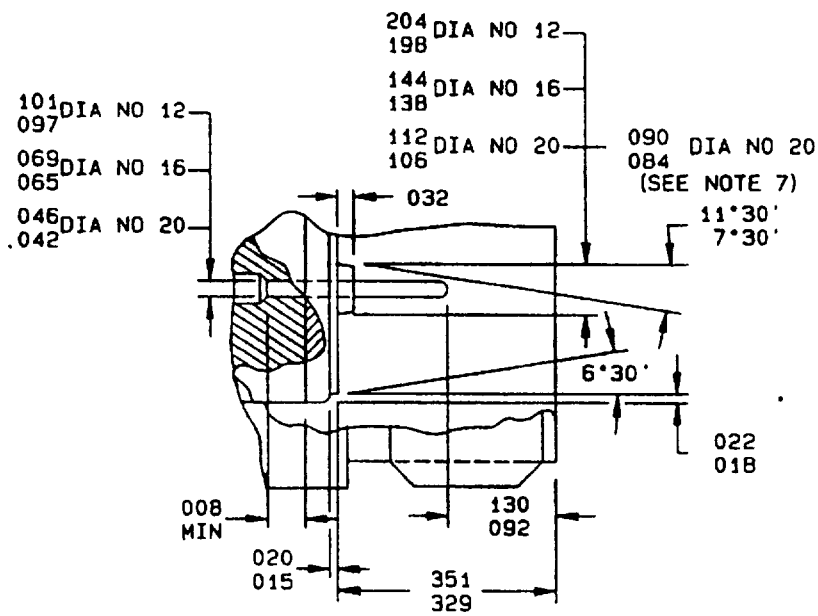

DETAIL S

FIGURE 1. Classes A, G, K, R, AND W - Continued.

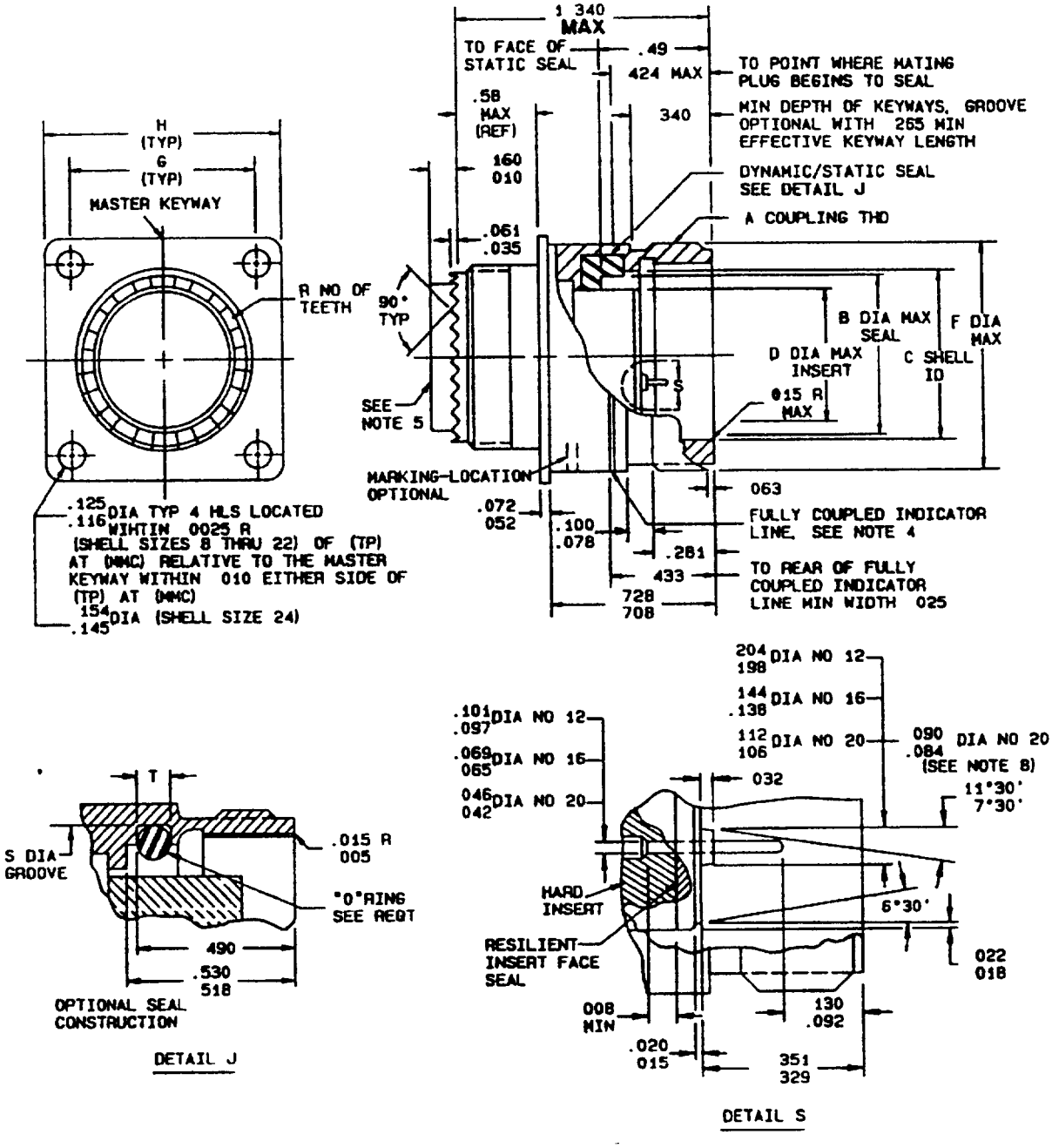

FIGURE 2. Classes N and S.

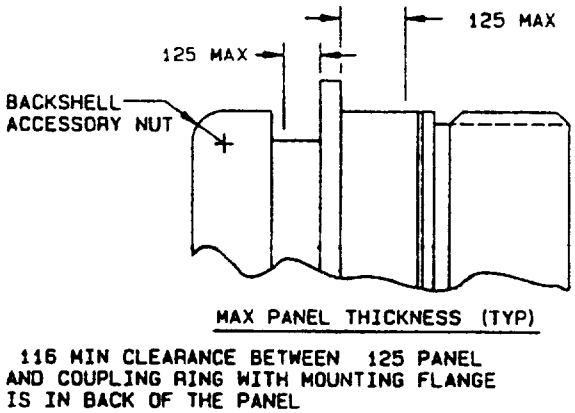

Connectors dimensions.

Shell size	A thread	B (D)	C	D	F	G	H	R
8	.562-24 UNEF-2A	.394	.418 .413	.290	.562	.594	.812	12
10	.688-24 UNEF-2A	.515	.535 .530	.388	.696	.719	.937	15
12	.875-20 UNEF-2A	.685	.705 .700	.558	.875	.812	1.031	21
14	.938-20 UNEF-2A	.754	.774 .769	.627	.936	.906	1.125	24
16	1.062-18 UNEF-2A	.881	.901 .896	.772	1.062	.969	1.250	30
18	1.188-18 UNEF-2A	.987	1.007 1.002	.860	1.187	1.062	1.343	33
20	1.312-18 UNEF-2A	1.112	1.132 1.127	.985	1.312	1.156	1.437	36
22	1.438-18 UNEF-2A	1.237	1.257 1.252	1.110	1.437	1.250	1.562	39
24	1.562-18 UNEF-2A	1.362	1.382 1.377	1.235	1.562	1.375	1.703	42

FIGURE 3. Dimensions and configurations.

Connector dimensions - Continued.

Shell size	S +.005 -.000	T
8	.490	.076 .071
10	.636	.089 .084
12	.806	.089 .084
14	.875	.089 .084
16	1.002	.089 .084
18	1.108	.089 .084
20	1.233	.089 .084
22	1.358	.089 .084
24	1.483	.089 .084

Inches	mm	Inches	mm	Inches	mm	Inches	mm	Inches	mm
.0025	0.063	.061	1.55	.116	2.95	.351	8.92	.580	14.70
.005	0.08	.063	1.60	.125	3.18	.388	9.86	.594	15.09
.008	0.20	.065	1.65	.130	3.30	.394	10.01	.627	15.93
.010	0.25	.069	1.75	.138	3.51	.413	10.49	.636	16.15
.015	0.38	.071	1.80	.144	3.66	.418	10.62	.685	17.40
.018	0.46	.072	1.83	.145	3.68	.424	10.77	.696	17.68
.020	0.51	.076	1.93	.154	3.91	.433	11.00	.700	17.78
.022	0.56	.078	1.98	.160	4.06	.480	12.19	.705	17.91
.025	0.64	.084	2.13	.195	4.95	.490	12.45	.708	17.98
.032	0.81	.089	2.26	.198	5.03	.515	13.08	.719	18.26
.035	0.89	.092	2.34	.204	5.18	.518	13.16	.728	18.49
.042	1.07	.100	2.54	.281	7.14	.530	13.46	.754	19.15
.046	1.17	.101	2.57	.290	7.37	.535	13.59	.769	19.53
.052	1.32	.106	2.69	.329	8.36	.558	14.17	.772	19.61
.061	1.55	.112	2.84	.340	8.64	.562	14.27	.774	19.66

FIGURE 3. Dimensions and configurations - Continued.

Inches	mm	Inches	mm	Inches	mm	Inches	mm	Inches	mm
.806	20.47	.969	24.61	1.125	28.58	1.250	31.75	1.377	34.98
.812	20.62	.985	25.02	1.127	28.63	1.252	31.80	1.382	35.10
.860	21.84	.987	25.07	1.132	28.75	1.257	31.93	1.437	36.50
.875	22.22	1.002	25.45	1.156	29.63	1.312	33.32	1.483	37.67
.881	22.37	1.007	25.58	1.187	30.15	1.320	33.53	1.562	39.67
.896	22.76	1.031	26.19	1.233	31.32	1.340	34.04	1.703	43.26
.901	22.89	1.062	26.97	1.235	31.37	1.343	34.11		
.906	23.01	1.108	28.14	1.237	31.42	1.358	34.49		
.936	23.77	1.110	28.19	1.240	31.50	1.362	34.59		
.937	23.80	1.112	28.24	1.250	31.75	1.375	34.92		

NOTES:
1. Dimensions are inches.
2. Metric equivalents are given for general information only and are based upon 1 inch = 25.4 mm.
3. Unless otherwise specified, tolerances are .005 (0.13 mm) for three place decimals and .01 (0.25 mm) for two place decimals. Angles ±1º.
4. (D) Coupling indicator line shall be color coded red.
5. Rear accessory interchangeability dimensions shall be in accordance with MIL-C-83723.
6. Shell size 8 will not mate with MIL-C-26500 connectors.
7. (D) See table I for contact cavities requiring this dimension.
8. The centerline of indicated projection must be located on vertical centerline within 2º.

FIGURE 3. Dimensions and configurations - Continued.

REQUIREMENTS:

Dimensions and configuration: See figures 1 and 3 for classes A, G, K, R, and W. See figures 2 and 3 for classes N and S.

This connector mates with MIL-C-83723/86, 91, 95, and 97.

(D) Insert arrangements and polarizing positions: See MIL-STD-1554 and table I.

TABLE I. Insert arrangements requiring reduced diameters for rasied seal barrier on outer row of contact cavities as indicated.

Shell size	Insert arrangements	Contact cavities
8	(D) 03	1, 2, and 3
10	(D) 06	1, 2, 3, 4, 5, 6

"O" ring: See MIL-C-83723.

(D) Part or Identifying Number (PIN) example:

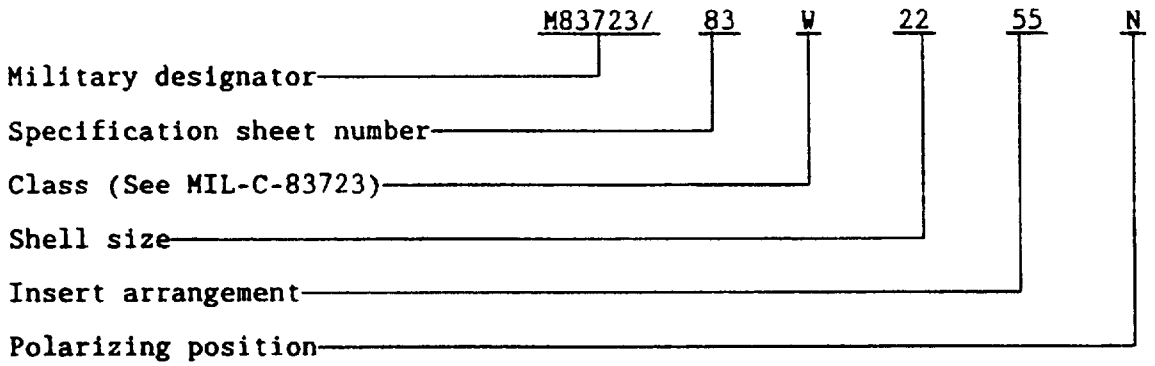

CONCLUDED MATERIAL

Custodians:
Army - CR
Navy - AS
Air Force - 85

Review activities:
Army - AR, MI
Navy - EC
Air Force - 11, 15, 17, 99
DLA - ES

Preparing activity:
Air Force - 85

Agent:
DLA - ES

(Project 5935-3728-16)