INCH-POUND

MIL-C-83723/84E
30 June 1992

SUPERSEDING
MIL-C-83723/84D
31 December 1986

MILITARY SPECIFICATION SHEET

CONNECTORS, ELECTRICAL, (CIRCULAR, ENVIRONMENT RESISTING), RECEPTACLE, (SINGLE HOLE MOUNT, THREADED COUPLING, CRIMP SOCKET CONTACT), (SERIES III, CLASSES A, G, K, N, R, S, AND W)

This specification is approved for use by all Departments and Agencies of the Department of Defense.

(E) The complete requirements for acquiring the product described herein shall consist of this specification sheet and the issue of the following specification listed in that issue of the Department of Defense Index of Specifications and Standards (DODISS) specified in the solicitation: MIL-C-83723.

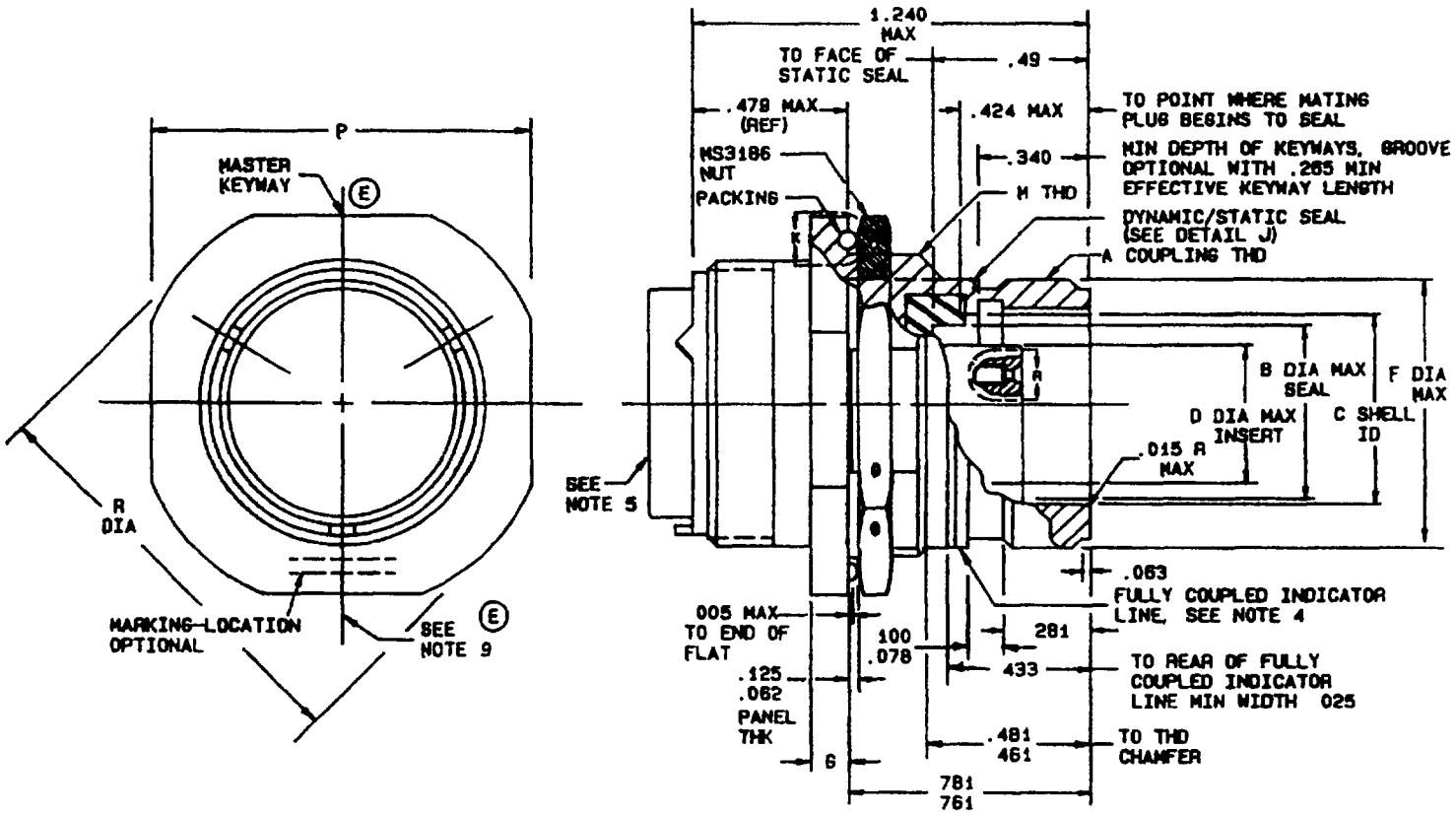

FIGURE 1. Classes A, G, K, R, and W.

(E) denotes changes

DISTRIBUTION STATEMENT A. Approved for public release; distribution is unlimted.

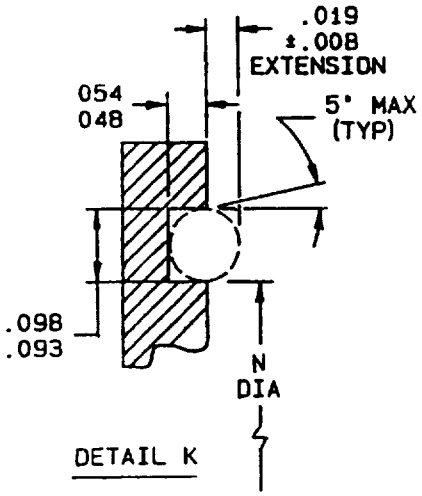

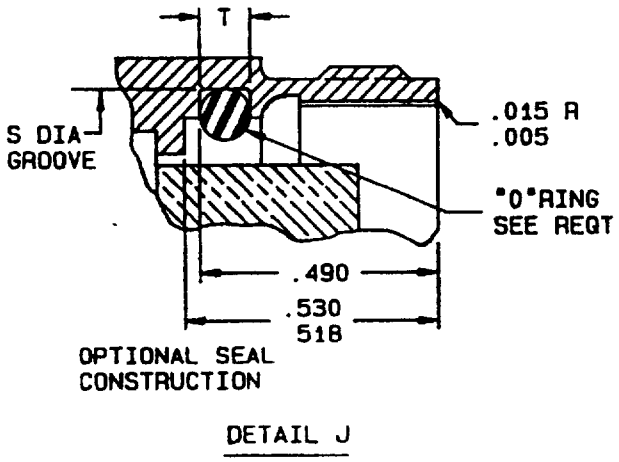

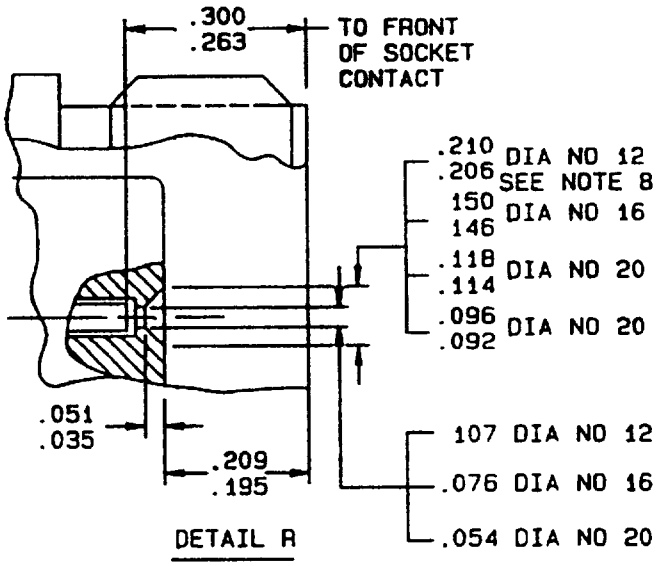

FIGURE 1. Classes A, G, K, R, and W - Continued.

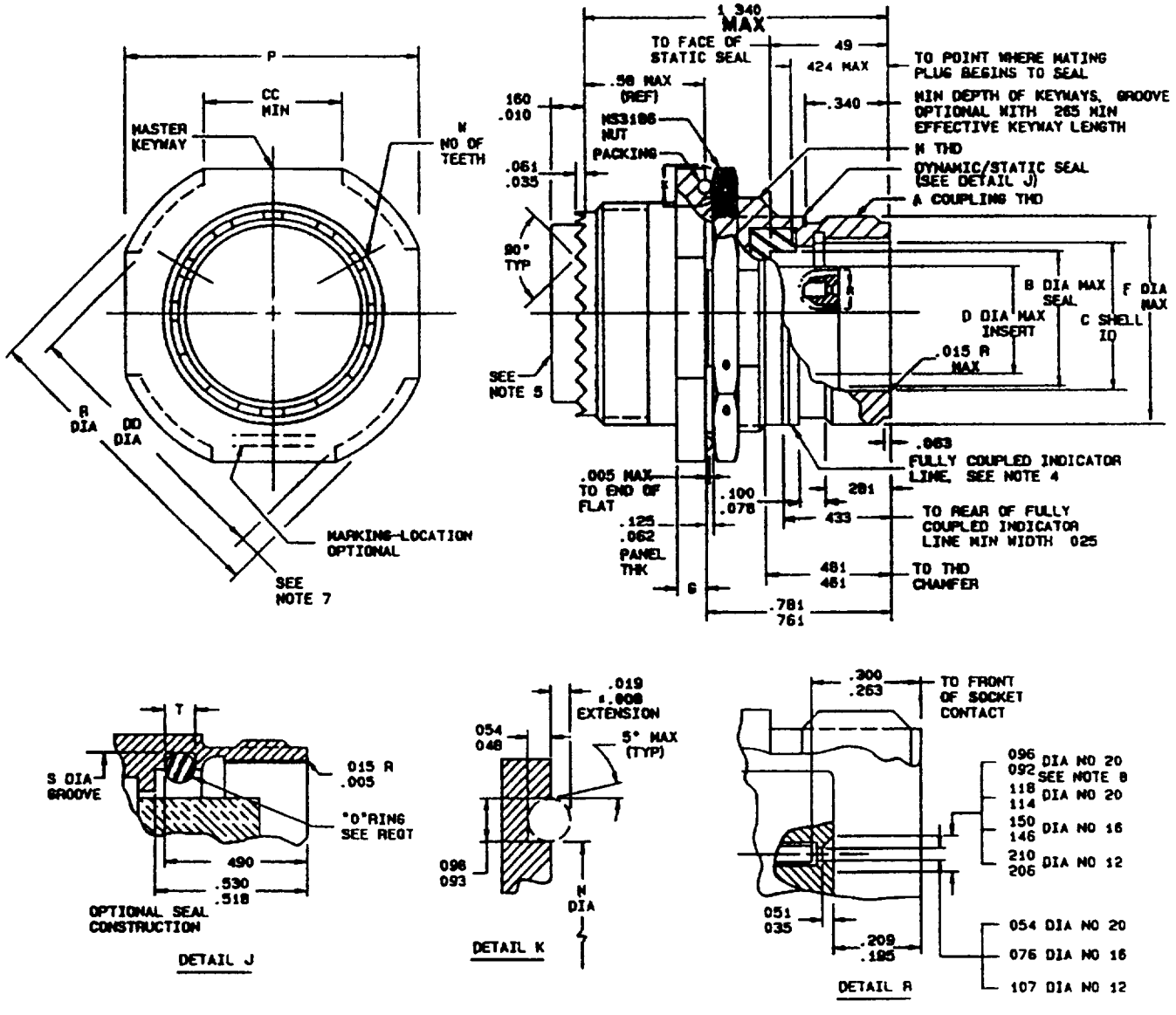

FIGURE 2. Classes N and S.

Connectors dimensions.

Shell size	A thread	B (E)	C	D	F	G	M thread
8	.562-24 UNEF-2A	.394	.418 .413	.290	.562	.137 .097	.625-25 UN-2A
10	.688-24 UNEF-2A	.515	.535 .530	.388	.696	.137 .097	.750-20 UNEF-2A
12	.875-20 UNEF-2A	.685	.705 .700	.558	.875	.137 .097	.938-20 UNEF-2A
14	.938-20 UNEF-2A	.754	.774 .769	.627	.936	.137 .097	1.000-20 UNEF-2A
16	1.062-18 UNEF-2A	.881	.901 .896	.772	1.062	.137 .097	1.125-18 UNEF-2A
18	1.188-18 UNEF-2A	.987	1.007 1.002	.860	1.187	.137 .097	1.250-18 UNEF-2A
20	1.312-18 UNEF-2A	1.112	1.132 1.127	.985	1.312	.137 .097	1.375-18 UNEF-2A
22	1.438-18 UNEF-2A	1.237	1.257 1.252	1.110	1.437	.148 .128	1.500-18 UNEF-2A
24	1.562-18 UNEF-2A	1.362	1.382 1.377	1.235	1.562	.168 .128	1.625-18 UNEF-2A

FIGURE 3. Dimensions and configurations.

Connector dimensions - Continued.

Shell size	N	P	R	S +.005 -.000	T	W	CC	DD
8	.670	.980 .949	1.078 1.047	.490	.076 .071	12	.443	.991
10	.796	1.104 1.073	1.192 1.161	.636	.089 .084	15	.443	1.107
12	.984	1.291 1.260	1.380 1.349	.806	.089 .084	21	.482	1.295
14	1.046	1.391 1.360	1.561 1.485	.875	.089 .084	24	.596	1.357
16	1.171	1.516 1.485	1.641 1.610	1.002	.089 .084	30	.622	1.482
18	1.296	1.641 1.610	1.766 1.735	1.108	.089 .084	33	.646	1.607
20	1.482	1.766 1.735	1.954 1.923	1.233	.089 .084	36	.648	1.795
22	1.609	1.954 1.923	2.078 2.047	1.358	.089 .084	39	.701	1.920
24	1.732	2.079 2.048	2.182 2.152	1.483	.089 .084	42	.726	2.045

FIGURE 3. Dimensions and configurations - Continued.

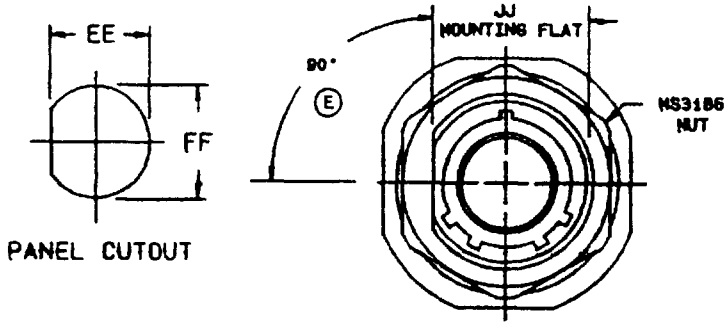

Connector dimensions - Continued.

Shell size	EE	FF	JJ
8	.605	.635	.596 .590
10	.730	.760	.721 .715
12	.917	.947	.908 .902
14	.980	1.010	.971 .965
16	1.105	1.135	1.096 1.090
18	1.229	1.260	1.220 1.214
20	1.354	1.385	1.345 1.339
22	1.479	1.510	1.470 1.464
24	1.604	1.635	1.595 1.589

FIGURE 3. Dimensions and configurations - Continued.

Inches	mm	Inches	mm	Inches	mm	Inches	mm	Inches	mm
.005	0.08	.263	6.68	.701	17.81	1.078	27.38	1.380	35.05
.008	0.20	.265	6.73	.705	17.91	1.090	27.69	1.382	35.10
.010	0.25	.281	7.14	.715	18.16	1.096	27.84	1.385	35.18
.015	0.38	.290	7.37	.721	18.31	1.104	28.04	1.391	35.33
.019	0.48	.300	7.62	.726	18.44	1.105	28.07	1.437	36.50
.025	0.64	.340	8.64	.730	18.54	1.107	28.12	1.464	37.19
.035	0.89	.388	9.86	.754	19.15	1.108	28.14	1.470	37.34
.048	1.22	.394	10.01	.760	19.30	1.110	28.19	1.479	37.57
.051	1.30	.398	10.11	.761	19.33	1.112	28.24	1.482	37.64
.054	1.37	.413	10.49	.769	19.53	1.127	28.63	1.483	37.67
.061	1.55	.418	10.62	.772	19.61	1.132	28.75	1.485	37.72
.062	1.57	.424	10.77	.774	19.66	1.135	28.83	1.510	38.35
.063	1.60	.433	11.00	.781	19.84	1.161	29.49	1.516	38.51
.071	1.80	.443	11.25	.796	20.22	1.171	29.74	1.561	39.65
.076	1.93	.461	11.71	.806	20.47	1.187	30.15	1.562	39.67
.078	1.98	.463	11.76	.860	21.84	1.192	30.28	1.589	40.36
.084	2.13	.479	12.17	.875	22.22	1.214	30.84	1.595	40.51
.089	2.26	.481	12.22	.881	22.37	1.220	30.99	1.604	40.74
.092	2.34	.482	12.24	.896	22.76	1.229	31.22	1.607	40.82
.093	2.36	.490	12.45	.901	22.89	1.233	31.32	1.609	40.87
.096	2.44	.515	13.08	.902	22.91	1.235	31.37	1.610	40.89
.097	2.46	.518	13.16	.908	23.06	1.237	31.41	1.635	41.53
.098	2.49	.530	13.46	.917	23.29	1.240	31.42	1.641	41.68
.100	2.54	.535	13.59	.936	23.77	1.252	31.80	1.732	43.99
.107	2.72	.558	14.17	.947	24.05	1.257	31.93	1.735	44.07
.114	2.90	.562	14.27	.949	24.10	1.260	32.00	1.766	44.86
.118	3.00	.580	14.70	.965	24.51	1.291	32.79	1.795	45.59
.125	3.18	.590	14.99	.971	24.66	1.295	32.89	1.920	48.77
.128	3.25	.596	15.14	.980	24.89	1.296	32.92	1.923	48.84
.137	3.48	.605	15.37	.984	24.99	1.312	33.32	1.954	49.63
.146	3.71	.622	15.80	.985	25.02	1.320	33.53	2.045	51.94
.148	3.76	.627	15.93	.987	25.07	1.339	34.01	2.047	51.99
.150	3.81	.635	16.13	.991	25.17	1.340	34.04	2.048	52.02
.154	3.91	.636	16.15	1.002	25.45	1.345	34.16	2.078	52.78
.160	4.06	.646	16.41	1.007	25.58	1.349	34.26	2.079	52.81
.168	4.27	.648	16.46	1.010	25.65	1.357	34.47	2.152	54.66
.195	4.95	.670	17.02	1.046	26.57	1.358	34.49	2.182	55.42
.206	5.22	.685	17.40	1.047	26.59	1.360	34.54		
.209	5.31	696	17.68	1.062	26.97	1.362	34.59		
.210	5.33	.700	17.78	1.073	27.25	1.377	34.98		

NOTES:

1. Dimensions are inches.
2. Metric equivlaents are given for general information only and are based upon 1 inch = 25.4 mm.
3. Unless otherwise specified, tolerances are .005 (0.13 mm) for three place decimals and .01 (0.25 mm) for two place decimals. Angles 1º.
4. (E) Coupling indicator line shall be color coded red.
5. Rear accessory interchangeability dimensions shall be in accordance with MIL-C-83723.
6. Shell size 8 will not mate with MIL-C-26500 connectors.
7. Phantomed configuration optional.
8. See table I for contact cavities requiring this dimension.
9. (E) The centerline of indicated projection must be located on vertical centerline within 2º.

FIGURE 3. Dimensions and configurations - Continued.

REQUIREMENTS:

Dimensions and configuration: See figures 1 and 3 for classes A, G, K, R, and W. See figures 2 and 3 for classes N and S.

This connector mates with MIL-C-83723/87, 92, 96, and 98.

(E) Insert arrangements and polarizing positions: See MIL-STD-1554 and table I.

TABLE I. Insert arrangements requiring reduced diameters for lead-in chamfer on outer row of contact cavities as indicated.

Shell size	Insert arrangements	Contact cavities
8	(E) 03	1, 2, and 3
10	(E) 06	1, 2, 3, 4, 5, 6

"O" ring: See MIL-C-83723.

(E) Part or Identifying Number (PIN) example:

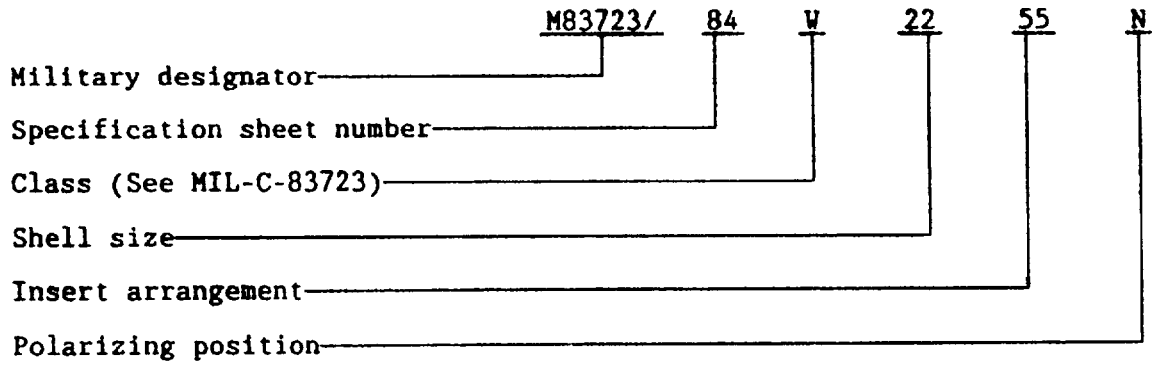

CONCLUDED MATERIAL

Custodians:
Army - CR
Navy - AS
Air Force - 85

(E) Review activities:
Army - AR, CR, MI
Navy - EC
Air Force - 11, 15, 99
DLA - ES

Preparing activity:
Air Force - 85

Agent:
DLA - ES

(Project 5935-3728-17)