INCH-POUND

MIL-C-83723/86D
30 June 1992

SUPERSEDING
MIL-C-83723/86C
17 April 1981

MILITARY SPECIFICATION SHEET

CONNECTORS, ELECTRICAL, (CIRCULAR, ENVIRONMENT RESISTING), PLUG, (THREADED COUPLING, CRIMP SOCKET CONTACT), (SERIES III, CLASSES A, G, K, R, AND W)

This specification is approved for use by all Departments and Agencies of the Department of Defense.

(D) The complete requirements for acquiring the product described herein shall consist of this specification sheet and the issue of the following specification listed in that issue of the Department of Defense Index of Specifications and Standards (DODISS) specified in the solicitation: MIL-C-83723.

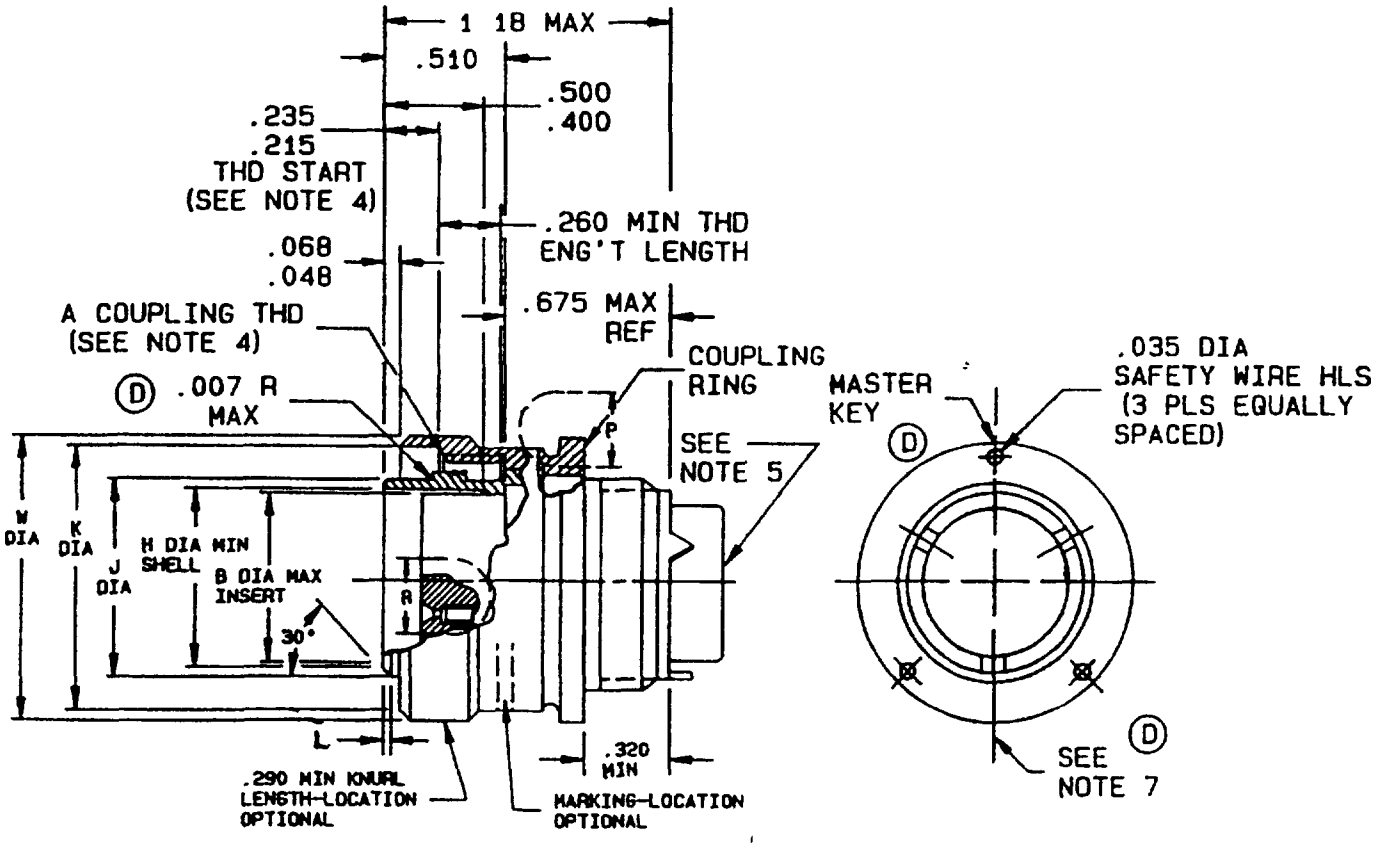

FIGURE 1. Dimensions and configurations.

(D) denotes changes

DISTRIBUTION STATEMENT A. Approved for public release; distribution is unlimted.

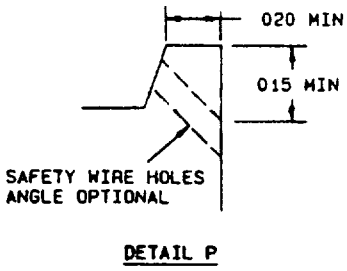

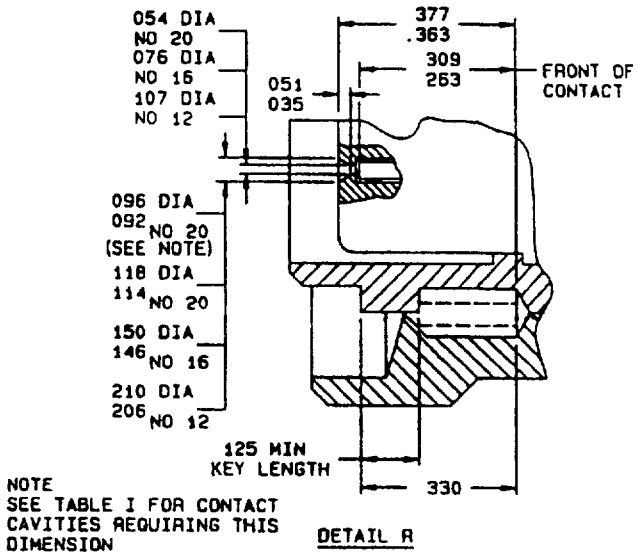

Connectors dimensions.

Shell size	A thread	B	H	J	K	(D)W	(D)L
8	.562-24 UNEF-2A	.290	.294	.405 .396	.575	.776	.025
10	.688-24 UNEF-2A	.388	.428	.526 .517	.707	.908	.031
12	.875-20 UNEF-2A	.558	.598	.696 .687	.895	1.080	.031
14	.938-20 UNEF-2A	.627	.667	.765 .756	.957	1.143	.031
16	1.062-18 UNEF-2A	.772	.794	.892 .883	1.084	1.268	.031
18	1.188-18 UNEF-2A	.860	.900	.998 .989	1.209	1.377	.031
20	1.312-18 UNEF-2A	.985	1.025	1.123 1.114	1.334	1.512	.031
22	1.438-18 UNEF-2A	1.110	1.150	1.248 1.239	1.459	1.627	.031
24	1.562-18 UNEF-2A	1.235	1.275	1.373 1.364	1.584	1.762	.031

FIGURE 1. Dimensions and configurations - Continued.

Inches	mm	Inches	mm	Inches	mm	Inches	mm	Inches	mm
.007	0.02	.210	5.33	.526	13.36	.892	22.66	1.209	30.71
.015	0.38	.215	5.46	.558	14.17	.895	22.73	1.235	31.37
.020	0.51	.235	5.97	.562	14.27	.900	22.86	1.239	31.47
.025	0.64	.260	6.60	.575	14.61	.908	23.06	1.248	31.70
.031	0.79	.263	6.68	.598	15.19	.938	23.83	1.268	32.21
.035	0.89	.290	7.37	.627	15.93	.957	24.31	1.275	32.38
.048	1.22	.294	7.47	.667	16.94	.985	25.02	1.312	33.32
.051	1.30	.309	7.85	.675	17.15	.989	25.12	1.334	33.88
.054	1.37	.320	8.13	.687	17.45	.998	25.35	1.364	34.65
.068	1.73	.330	8.38	.688	17.48	1.025	26.04	1.373	34.87
.076	1.93	.363	9.22	696	17.68	1.062	26.97	1.377	34.98
.092	2.34	.377	9.58	.707	17.96	1.080	27.43	1.438	36.53
.096	2.44	.388	9.86	.756	19.20	1.084	27.53	1.459	37.06
.107	2.72	.396	10.06	.765	19.43	1.110	28.19	1.512	38.40
.114	2.90	.400	10.16	.772	19.61	1.114	28.30	1.562	39.67
.118	3.00	.405	10.29	.776	19.71	1.123	28.52	1.584	40.23
.125	3.18	.428	10.87	.794	20.17	1.143	29.03	1.627	41.33
.146	3.71	.500	12.70	.860	21.84	1.150	29.21	1.762	44.75
.150	3.76	.510	12.95	.875	22.22	1.180	29.97		
.206	5.22	.517	13.13	.883	22.43	1.188	30.18		

NOTES:
1. Dimensions are inches.
2. Metric equivlaents are given for general information only and are based upon 1 inch = 25.4 mm.
3. Unless otherwise specified, tolerances are .005 (0.13 mm) for three place decimals and .01 (0.25 mm) for two place decimals. Angles $\pm 1°$.
4. (D) Coupling indicator line shall be color coded red.
5. Rear accessory interchangeability dimensions shall be in accordance with MIL-C-83723.
6. Shell size 8 will not mate with MIL-C-26500 connectors.
7. Phantomed configuration optional.
8. See table I for contact cavities requiring this dimension.
9. (D) The centerline of indicated projection must be located on vertical centerline within 2º.

FIGURE 1. Dimensions and configurations - Continued.

REQUIREMENTS:

Dimensions and configuration: See figures 1.

This connector mates with MIL-C-83723/83, 85, 88, 89, and 90.

(D) Insert arrangements and polarizing positions: See MIL-STD-1554 and table I.

TABLE I. Insert arrangements requiring reduced diameter for lead-in chamfer on outer row of contact cavities as indicated.

Shell size	Insert arrangement	Contact cavities
8	(D) 03	1, 2, and 3
10	(D) 06	1, 2, 3, 4, 5, 6

(D) Part or Identifying Number (PIN) example:

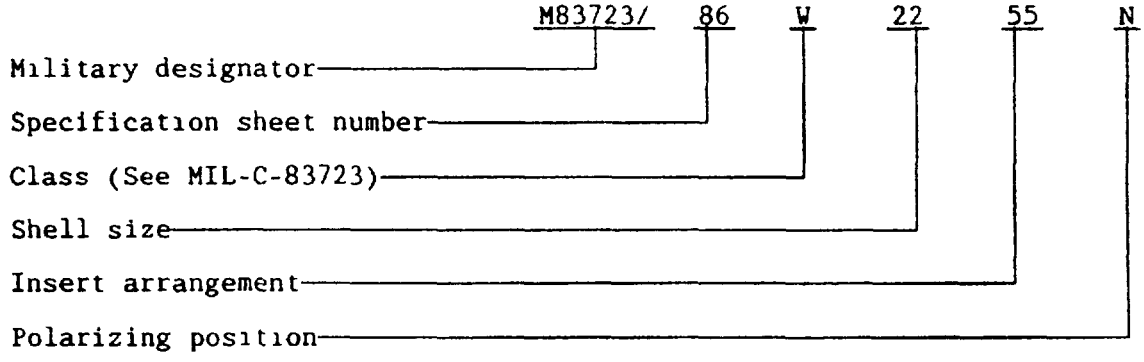

CONCLUDING MATERIAL

Custodians:
Army - CR
Navy - AS
Air Force - 85

Review activities:
Army - AR, MI
Navy - EC
Air Force - 11, 15, 17, 99
DLA - ES

Preparing activity:
Air Force - 85

Agent:
DLA - ES

Project 5935-3728-19