FED SUP CLASS
5930

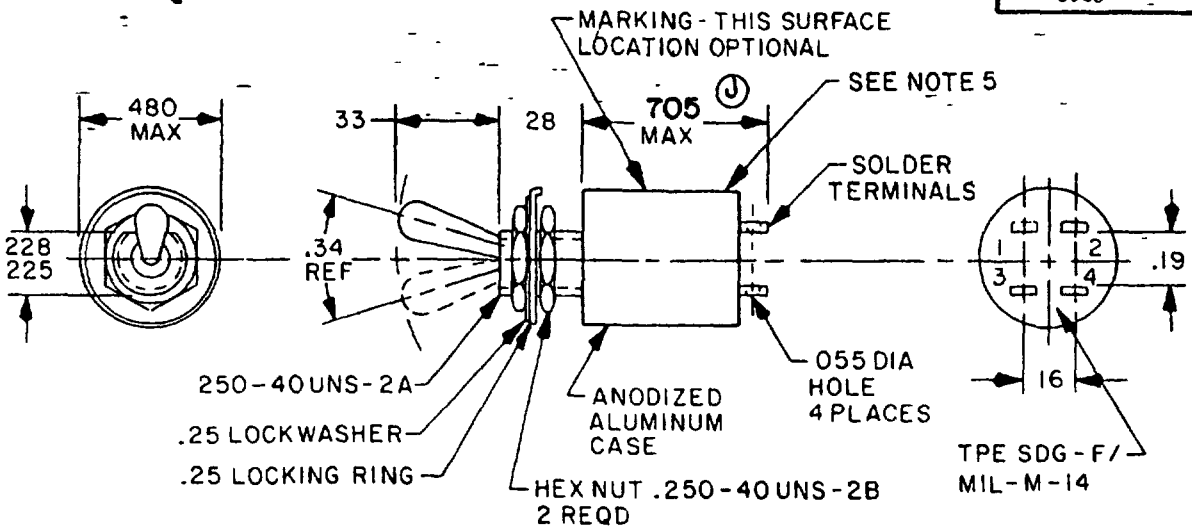

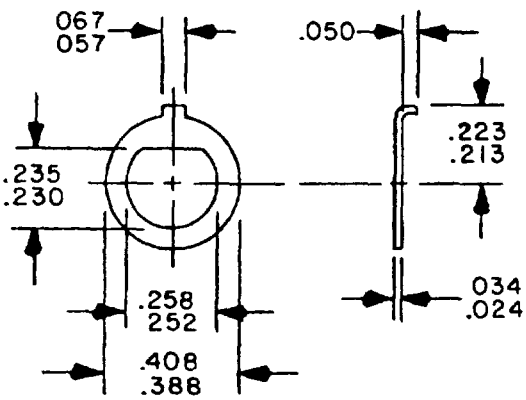

WASHER, KEY "D"

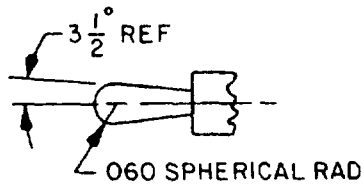

TOGGLE LEVER DETAIL

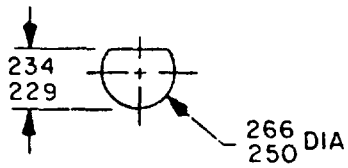

RECOMMENDED PANEL MTG HOLE

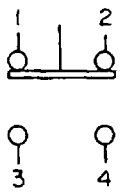

SCHEMATIC DIAGRAM
(CIRCUIT INDICATED IS WITH TOGGLE LEVER IN KEYING SIDE)

MILITARY PART NUMBER
MS18150-1

(J) Denotes changes

P A USAF - 85 Other Cust ARMY - ER NAVY - EC	International Interest	TITLE SWITCH, TOGGLE, 2 CIRCUIT, SEALED TOGGLE	MILITARY STANDARD MS18150
Procurement Specification MIL-S-83731		SUPERSEDES	PAGE 1 OF 2

DD FORM 1 MAY 73 672 (Coordinated) PREVIOUS EDITIONS OF THIS FORM ARE OBSOLETE

5930-1258-1

User activities: Army - Navy - Air Force -

Review activities: Army - AV, Navy - AS, Air Force - 11, 99, DLA - ES

This military standard is approved for use by all Departments and Agencies of the Department of Defense. Selection for all new engineering and design applications and for repetitive use shall be made from this document when applicable

APPROVED 5 January 1965 REVISED (J) 21 FEB 84

INCHES	MM	INCHES	MM	INCHES	MM	INCHES	MM	INCHES	MM
.024	0.61	.16	4.1	.229	5.82	.258	6.55	.480	12.19
.034	0.86	.19	4.8	.230	5.84	.266	6.76	.688	17.48
.055	1.40	.213	5.41	.234	5.94	.28	7.1	.705	17.91 (J)
.057	1.45	.223	5.66	.235	5.97	.33	8.4		
.060	1.52	.225	5.72	.250	6.35	.388	9.86		
.067	1.70	.228	5.79	.252	6.40	.408	10.36		

DETAIL REQUIREMENTS

1. All switches on this standard are designed so that the movement of the switch mechanism is the same as that of the toggle lever.
2. Switching action: Keying side - On, Center - None, Opposite side - On.
3. Electrical ratings

	28 V dc	120 V dc	115 V ac 60 and 400 Hz
RES	3 A	0 1 A	2 A
IND	1 A	0 1 A	1 A
LAMP	0.5 A	0 1 A	0 5 A

4. Strength of actuating lever pivot and lever stop 12 pounds.
5. Dielectric withstanding voltage

   Initial: 1,000 V (sea level), 400 V (altitude).
   After endurance tests = 600 V

6. Shock. Method II.
7. Operating temperature range -40°C to +71°C
8. Short circuit Method II
9. Weight 0.012 pound maximum

NOTES. (J)

1. Dimensions are in inches.
2. Metric equivalents are given for general information only.
3. Unless otherwise specified, tolerances are ±.005 (0.13 mm) for three place decimals and ±.02 (0.5 mm) for two place decimals.
4. For hardware detail specifications see appendix MIL-S-83731.
5. Contour of switch optional provided maximum dimensions specified are not exceeded.
6. Referenced documents shall be of the issue in effect on date of invitation for bid.
7. For design feature purposes, this standard takes precedence over procurement documents referenced herein.

APPROVED 5 January 1965 REVISED (J) For changes see pages 1 and 2

This military standard is approved for use by all Departments and Agencies of the Department of Defense. Selection for all new engineering and design applications and for repetitive use shall be made from this document when applicable

User activities: Army - Navy - Air Force -

Review activities: Army - AV Navy - AS Air Force - 11,99 DLA - ES

P A USAF - 85 Other Cust Army - ER Navy - EC	International interest	TITLE SWITCH, TOGGLE, 2 CIRCUIT, SEALED TOGGLE	MILITARY STANDARD MS18150
Procurement Specification MIL-S-83731		SUPERSEDES	PAGE 2 OF 2