FED. SUP CLASS
5930

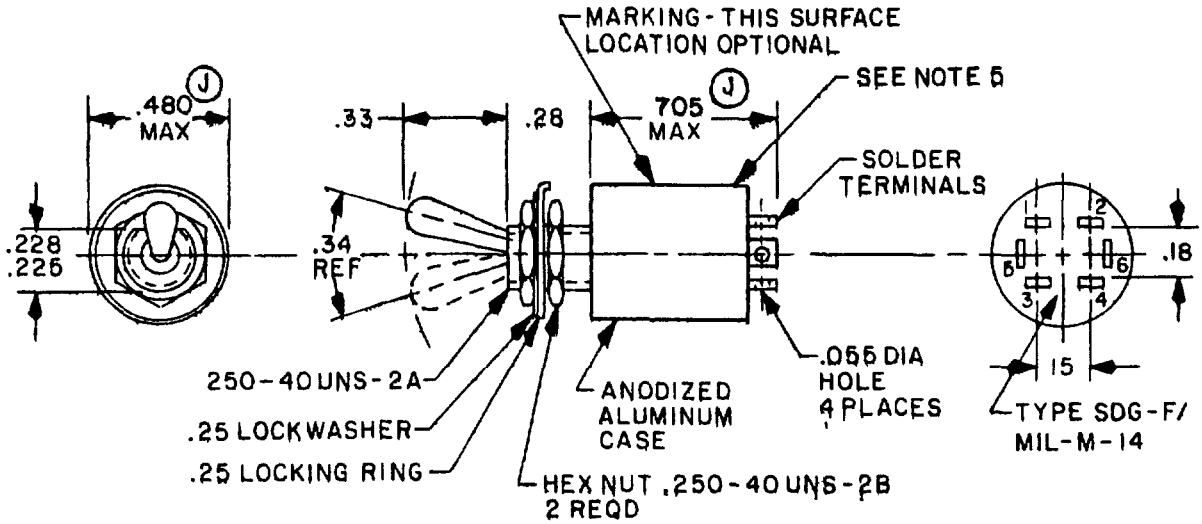

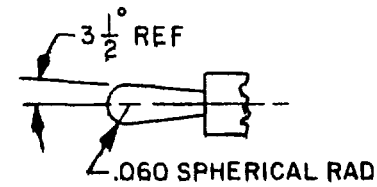

TOGGLE LEVER DETAIL

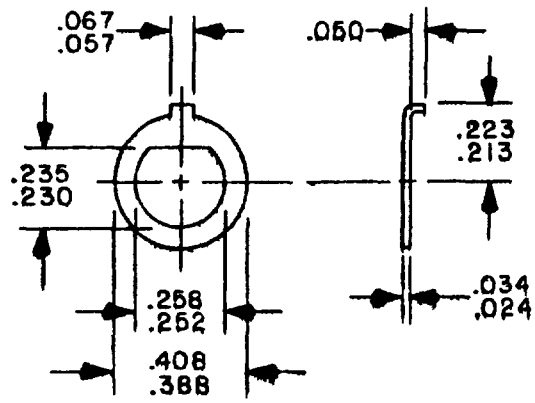

WASHER, KEY "D"

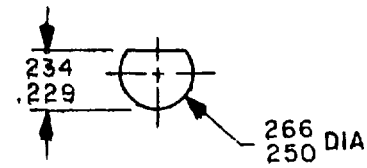

RECOMMENDED PANEL MTG HOLE

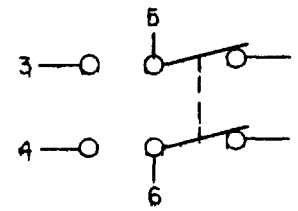

SCHEMATIC DIAGRAM
(CIRCUIT INDICATED IS WITH TOGGLE LEVER IN KEYING SIDE)

MILITARY PART NUMBER
MS18152-1

(J) Denotes changes

APPROVED 5 January 1965 REVISED (J) 21 FEB 84

P A USAF - 85 Other Cust ARMY - ER NAVY - EC	International Interest	TITLE SWITCH, TOGGLE, TWO POLE, SEALED TOGGLE	MILITARY STANDARD MS18152
Procurement Specification MIL-S-83731		SUPERSEDES	PAGE 1 OF 2

DD FORM 1 MAY 73 672 (Coordinated) PREVIOUS EDITIONS OF THIS FORM ARE OBSOLETE 5930-1258-2

This military standard is approved for use by all Departments and Agencies of the Department of Defense. Selection for all new engineering and design applications and for repetitive use shall be made from this document when applicable.

Review activities: Army - AV, Navy - AS, Air Force - 11, 99

User activities: Army - , Navy - , Air Force -

INCHES	MM	INCHES	MM	INCHES	MM	INCHES	MM	INCHES	MM
.024	0.61	.15	3.8	.229	5.82	.268	6.66	.473	12.01
.034	0.86	.18	4.6	.230	5.84	.266	6.76	.480	12.19
.055	1.40	.213	5.41	.234	5.94	.28	7.1	.688	17.48
.057	1.45	.223	5.66	.235	5.97	.33	8.4	.705	17.91
.060	1.52	.225	5.72	.250	6.35	.388	9.86		
.067	1.70	.228	5.79	.252	6.40	.408	10.36		

(J)

DETAIL REQUIREMENTS:

1. All switches on this standard are designed so that the movement of the switch mechanism is the same as that of the toggle lever.
2. Switching action: Keying side - On; Center - None; Opposite side - On.
3. Electrical ratings:

	28 V dc	120 V dc	115 V ac 60 and 400 Hz
RES.	2 A	0.1 A	1 A
IND.	0.5 A	0.1 A	0.5 A
LAMP	0.5 A	0.1 A	0.5 A

4. Strength of actuating lever pivot and lever stop: 12 pounds.
5. Dielectric withstanding voltage:
   Initial: 1,000 V (sea level), 400 V (altitude).
   After endurance tests - 600 V.
6. Shock: Method II.
7. Operating temperature range: -40°C to +71°C.
8. Short circuit: Method II.
9. Weight: 0.012 pound maximum.

NOTES:

1. Dimensions are in inches.
2. Metric equivalents are given for general information only.
3. Unless otherwise specified, tolerances are ±.005 (0.13 mm) for three place decimals and ±.02 (0.5 mm) for two place decimals.
4. For hardware detail specifications see appendix MIL-S-83731.
5. Contour of switch optional provided maximum dimensions specified are not exceeded.
6. Referenced documents shall be of the issue in effect on date of invitation for bid.
7. For design feature purposes, this standard takes precedence over procurement documents referenced herein.

(J)

This military standard is approved for use by all Departments and Agencies of the Department of Defense. Selection for all new engineering and design applications and for repetitive use shall be made from this document when applicable

User activities: Army - Navy - Air Force -

Review activities: Army -AV Navy -AS Air Force - 11, 99

APPROVED 5 January 1965 REVISED (H) For changes see pages 1 (J) For changes see pages 1 and 2

P.A USAF - 85 Other Cust Army - ER Navy - EC	International interest	TITLE SWITCH, TOGGLE, TWO POLE, SEALED TOGGLE	MILITARY STANDARD MS18152
Procurement Specification MIL-S-83731		SUPERSEDES:	PAGE 2 OF 2