FED. SUP CLASS
5930

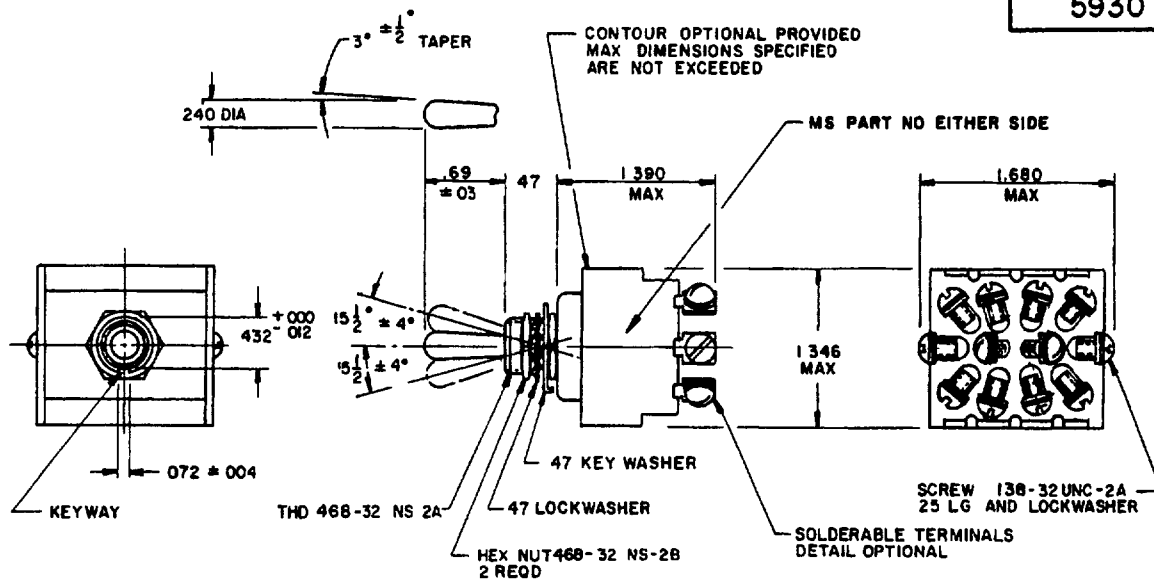

1. FOR HARDWARE AND TERMINAL SCREW DETAIL SPECIFICATIONS SEE SUPPLEMENT OF MIL-S-83731
2. ALL DIMENSIONS ARE IN INCHES.
3. UNLESS OTHERWISE SPECIFIED, TOLERANCE IS ± .020 ON TWO PLACE DECIMALS AND ± .005 ON THREE PLACE DECIMALS

DETAIL REQUIREMENTS

MS PART NO	FORMER MS PART NO	CIRCUIT WITH TOGGLE LEVER IN: KEYING SIDE	CENTER	OPPOSITE KEYING SIDE	CURRENT CAPACITY (AMPERES PER POLE): Direct Current, Lamp-Load Circuit, 28 Volts	Direct Current, Resistive Circuit, 28 Volts	Direct Current, Inductive Circuit, 28 Volts	Alternating Current (400 HERTZ), Lamp-Load Circuit, 115 Volts	Alternating Current (400 HERTZ), Resistive Circuit, 115 Volts	Alternating Current (400 HERTZ), Inductive Circuit, 115 Volts
MS25068-21	MS25068-1	ON	OFF	ON	5	20	12	4	20	15
-23	-3		NONE							
-24	-11	NONE	OFF							
-25	-13		MOM-OFF							
-26	-10	MOM-ON	NONE		4	18	10	2	11	5
-27	-7		OFF	MOM-ON						
-28	-12			NONE						
-31	-5			ON						

1. ALL SWITCHES ON THIS STANDARD ARE DESIGNED SO THAT THE MOVEMENT OF THE SWITCH MECHANISM IS OPPOSITE TO THAT OF THE TOGGLE LEVER
2. MAXIMUM WEIGHT IS 0.16 LBS
3. ENDURANCE ELECTRICAL 10,000 CYCLES
   MECHANICAL 20,000 CYCLES

REFERENCED DOCUMENTS SHALL BE OF THE ISSUE IN EFFECT ON THE DATE OF INVITATION FOR BID. FOR DESIGN FEATURE PURPOSES, THIS STANDARD TAKES PRECEDENCE OVER PROCUREMENT DOCUMENTS REFERENCED HEREIN

(J) INACTIVE FOR DESIGN AFTER 16 SEP 1969
USE MS24525 OR MS25308

Reviewer - AF 11, AV, EC, ES

APPROVED 28 MARCH 1954 REVISED (D) 20 APRIL 1967 (E) 16 SEPT 1969 (F) 22 APRIL 1971 (G) 22 MAY 1972 (H) 17 NOV 1972 (J) 15 NOV 80

P.A. AF 85 Other Cust ARMY-ER NAVY-AS	TITLE SWITCH, TOGGLE, FOUR POLE, SEALED TOGGLE	MILITARY STANDARD MS25068
PROCUREMENT SPECIFICATION MIL-S-83731	SUPERSEDES	SHEET 1 OF 1

DD FORM 1 SEP 63 672-1 (Coordinated) EDITION OF 1 SEP 57 MAY BE USED

5930-1146-1

This military standard is approved by the Department of Defense and is mandatory on all activities. Selection for all new engineering and design applications and for repetitive use shall be made from this document