FED. SUP CLASS
5930

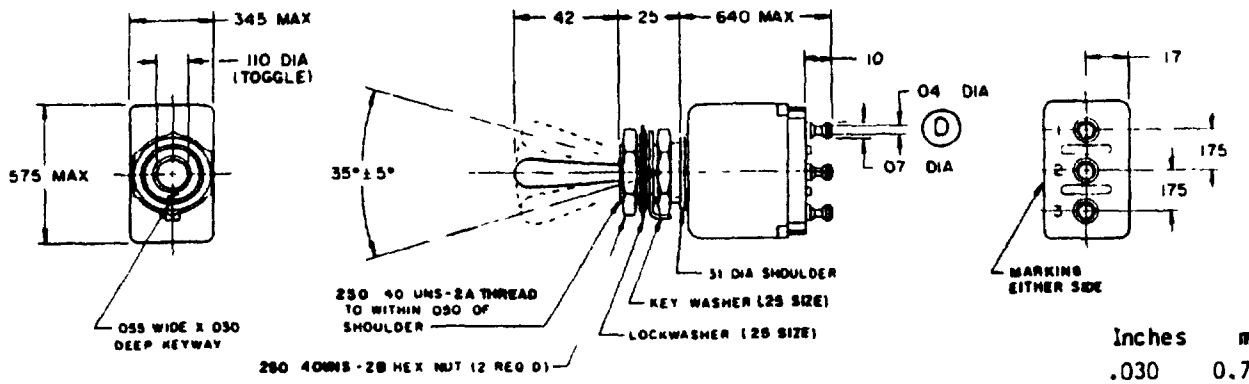

Inches	mm
.030	0.76
.04	1.02
.050	1.27
.055	1.40
.07	1.78
.10	2.5
.110	2.79
.17	4.3
.175	4.45
.250	6.35
.25	6.4
.31	7.9
.345	8.76
.42	10.7
.575	14.61
.640	16.26

NOTES:
1. Dimensions are in inches.
2. Metric equivalents are given for general information only.
3. Unless otherwise specified, tolerance is ±.020 (0.51 mm) on two place decimals and ±.005 (0.13 mm) on three place decimals.
4. For hardware detail specifications, see supplement of MIL-S-83731.
5. Configuration of switch case is optional provided maximum dimensions specified are not exceeded.

DETAIL REQUIREMENTS:

CANCELED MS PART NUMBER 1/	SUBSTITUTE MS PART NUMBER 1/	CIRCUITS MADE WITH TOGGLE LEVER IN: KEYING SIDE 1-2	CENTER POSITION	OPPOSITE KEYING SIDE 2-3
MS27716-21	MS27716-21-1	ON	OFF	ON
-22	-22-1	OFF	NONE	ON
-23	-23-1	ON	NONE	ON
-26	-26-1	MOM-ON	NONE	ON
-27	-27-1	MOM-ON	OFF	MOM-ON
-31	-31-1	MOM-ON	OFF	ON

1/ The canceled part numbers are no longer procurable; the substitute part numbers have a lower dielectric withstanding voltage at reduced barometric pressure (see 2 below).

NOTES:
1. All switches on this standard are designed so that the movement of the switch mechanism is opposite to that of the toggle lever.
(D) 2. Test voltage for dielectric withstanding voltage at reduced barometric pressure, shall be 400 V rms minimum.
3. Electrical endurance shall be performed for 30,000 cycles.
4. Mechanical endurance shall be performed 50,000 cycles at -65°C and then 50,000 cycles at 85°C.
5. Intermediate current shall be performed for 30,000 cycles.
6. Terminals shall be molded into the switch case and shall accommodate no. 18 awg wire.
7. Strength of actuating lever pivot and lever stop. 8 lbs.
8. Sand and dust: Toggle boots in accordance with MIL-B-5423 shall be used.
9. Maximum weight shall be .015 lb.
10. Electrical ratings for 28 volts dc and 115 volts ac at 400 Hz. Lamp load = 1 ampere, resistive load = 5 amperes, inductive load = 2 amperes.
(D) 11. In the event of a conflict between the text of this standard and the reference cited herein, the text of this standard shall take precedence.
(D) 12. Referenced Government documents of the issue listed in that issue of the Department of Defense Index of Specifications and Standards (DODISS) specified in the solicitation form a part of this standard to the extent specified herein

(D) denotes changes

APPROVED 6 MAY 1968 REVISED (A) 16 SEPT 1969 (B) 22 MAY 1972 (C) 14 AUG 1984 (D) 20 MAY 1988

P.A. - AF85 Other Cust NAVY - EC ARMY - ER	TITLE SWITCH, TOGGLE, MINIATURE, SINGLE POLE, UNSEALED	MILITARY STANDARD MS27716
PROCUREMENT SPECIFICATION MIL-S-83731	SUPERSEDES	SHEET 1 OF 1

5930-1378-01

AMSC N/A

DISTRIBUTION STATEMENT A Approved for public release, distribution is unlimited