INCH-POUND

MS27719F
26 June 1995
SUPERSEDING
MS27719E
18 June 1990

MILITARY SPECIFICATION SHEET

(F) SWITCH, TOGGLE, MINIATURE DOUBLE POLE, TOGGLE SEAL

This specification is approved for use by all Departments and Agencies of the Department of Defense.

The requirements for acquiring the product described herein shall consist of this specification sheet and the issue of the following specification listed in that issue of the Department of Defense Index of Specifications and Standards (DODISS) specified in the solicitation: MIL-S-83731.

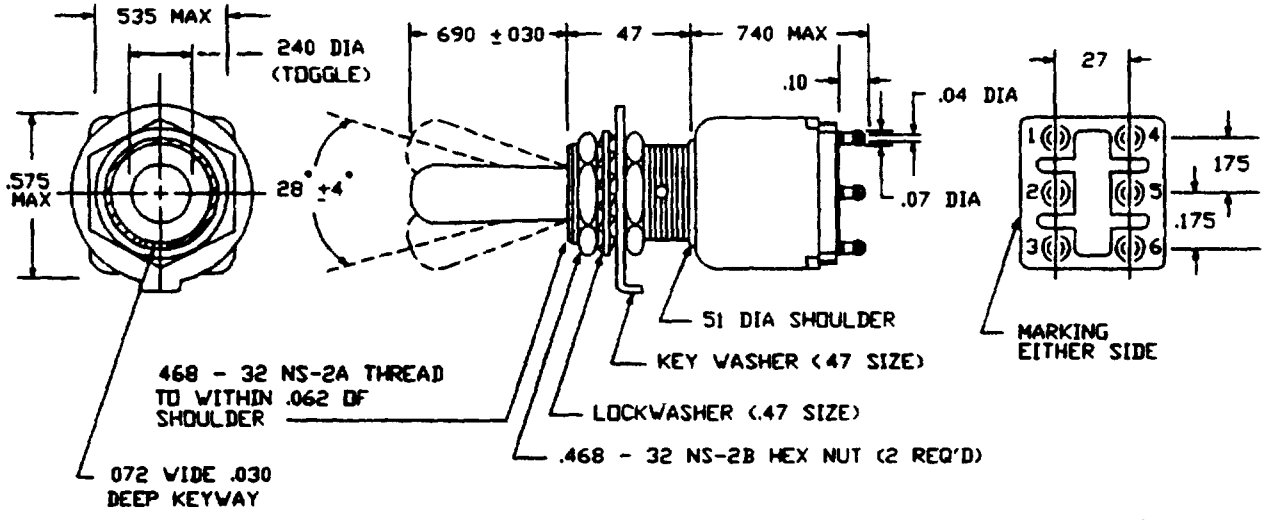

Inches	mm	Inches	mm	Inches	mm	Inches	mm	Inches	mm	Inches	mm
.030	0.76	.07	1.78	.175	4.45	.468	11.89	.535	13.59	.740	18.80
.04	1.02	.072	1.83	.240	6.10	.47	11.9	.575	14.61		
.062	1.57	.10	2.5	.27	6.9	.51	13.0	.690	16.26		

NOTES:
1. Metric equivalents are given for information only.
2. Dimensions are in inches.
3. Unless otherwise specified, tolerances are ±.020 (0.51 mm) on two place decimals and ±.005 (0.13 mm) on three place decimals.
4. For hardware detail specifications see appendix of MIL-S-83731.
5. Configuration of switch case is optional provided maximum dimensions specified are not exceeded.
6. Terminals shall accommodate no.18 awg wire.

FIGURE 1. Dimension and configurations.

(F) denotes changes

DISTRIBUTION STATEMENT A. Approved for public release; distribution is unlimited.

REQUIREMENTS:

Design and construction: See figure 1.

Switching characteristics: See table I. Direction of the movement of the switch mechanism is opposite to that of the toggle lever.

Weight: .4 ounce maximum.

Dielectric withstanding voltage: Test voltage for dielectric withstanding voltage at reduced barometric pressure, shall be 400 V rms minimum.

(F) Toggle seal test: Applicable

Electrical endurance: 30,000 cycles.

Electrical ratings:

28 V dc and 115 V ac 400 Hz:

Resistive loads: 5 amperes
Inductive loads: 2 amperes.
Lamp loads: 1 ampere.

Intermediate current: 30,000 cycles

Mechanical endurance: 50,000 cycles at -65°C then 50,000 cycles at 85°C

Part or Identifying Number (PIN):

Example:

MS27719 - 21 - 1

Dash number (see table I)

PIN MS27719-21-1 identifies a switch with a circuit configuration of ON in the down position (keying side), OFF in center position, and , ON in the up position (opposite the keying side).

(F) TABLE I. Switching characteristics.

MS PART NUMBER 1/	CIRCUITS MADE WITH TOGGLE LEVER IN		
	KEYING SIDE 1-2 4-5	CENTER POSITION	OPPOSITE KEYING SIDE 2-3 5-6
MS27719-21-1	ON	OFF	ON
-22-1	OFF	NONE	ON
-23-1	ON	NONE	ON
-26-1	MOM-ON	NONE	ON
-27-1	MOM-ON	OFF	MOM-ON
-31-1	MOM-ON	OFF	ON

1/ The canceled part numbers (without a -1 suffix) are no longer procurable; the substitute part numbers shown have a lower dielectric withstanding voltage at reduced barometric pressure

(F) CONCLUDING MATERIAL

Custodian:
Air Force - 85
Navy - EC
Army - ER

Review activity:
Air Force - 99
Army - AV

Preparing activity:
DLA - ES

(Project 5930-1608)