INCH-POUND

MS75029K
10 Feb 1992
SUPERSEDING
MS75029J
18 June 1990

MILITARY SPECIFICATION SHEET

SWITCH, TOGGLE, TWO POLE, UNSEALED

This specification is approved for use by all Departments and Agencies of the Department of Defense.

The requirements for acquiring the product described herein shall consist of this specification sheet and the issue of the following specification listed in that issue of the Department of Defense Index of Specifications and Standards (DODISS) specified in the solicitation: MIL-S-83731.

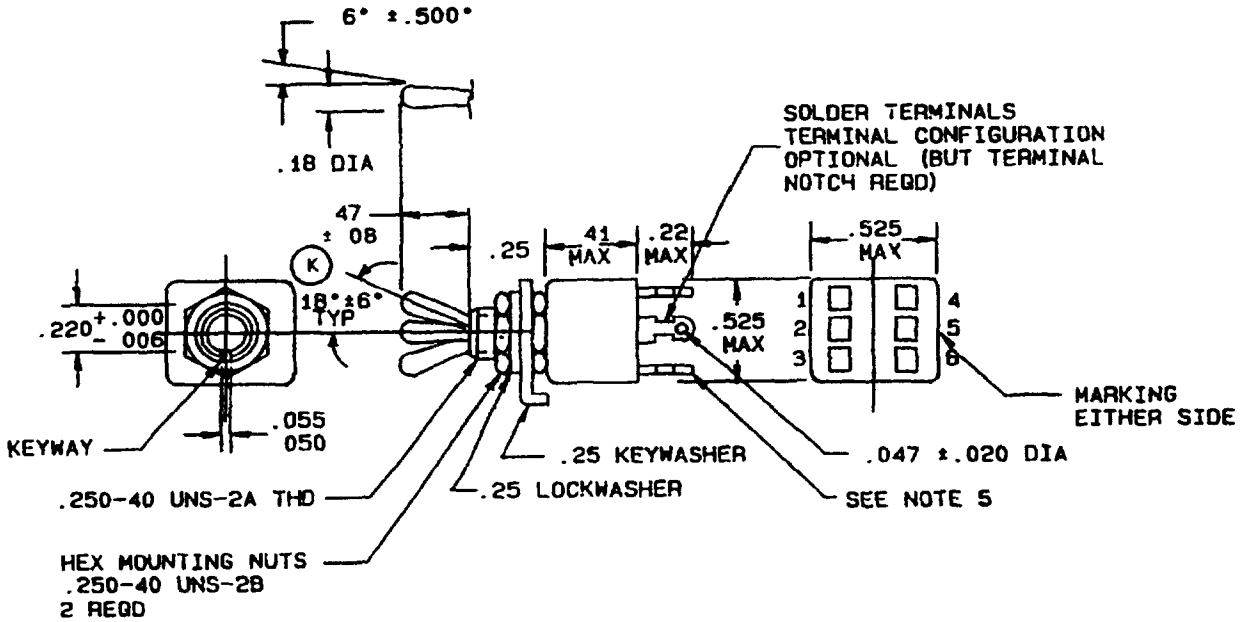

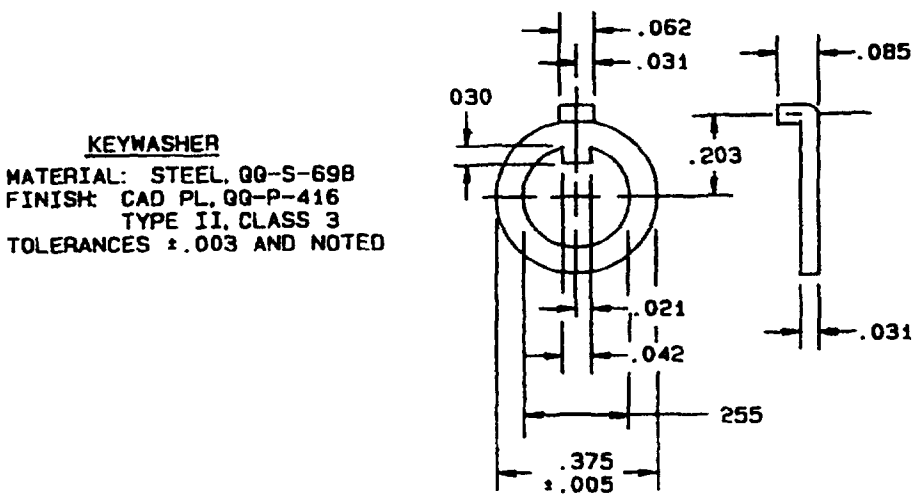

KEYWASHER
MATERIAL: STEEL, QQ-S-698
FINISH: CAD PL, QQ-P-416
TYPE II, CLASS 3
TOLERANCES ±.003 AND NOTED

FIGURE 1. Dimensions and configurations

(K) denotes changes

DISTRIBUTION STATEMENT A Approved for public release, distribution is unlimited

Inches	mm	Inches	mm
.003	08	085	2.0
005	13	18	4 57
.006	15	203	5 16
.020	.51	220	5 59
021	.53	.22	5.6
031	79	250	6 35
042	1 07	.255	6.48
.047	1.19	375	9 53
.050	1.27	41	10 4
055	1 40	.47	11.9
062	1 57	525	13.34
.08	2.0		

NOTES

1 Dimensions are in inches
2 Metric equivalents are given for general information only.
3 Unless otherwise specified, tolerances are ± 020 on two place decimals and ± 005 on three place decimals
4 For hardware detail specifications, see appendix, MIL-S-83731, and herein
5 Terminals 3 and 6 are not supplied on DPST switch (MS75029-22)

FIGURE 1 Dimensions and configurations - Continued

REQUIREMENTS.

Dimensions and configuration. See figure 1

Switching characteristics See table I.

TABLE I. Switching characteristics.

MS Part or Identifying Number (PIN)	Circuit with toggle lever in		
	Down position (keying side)	Center position	Up position (opposite keying)
MS75029-21	ON	OFF	ON
MS75029-22	OFF	NONE	ON
MS75029-23	ON	NONE	ON
MS75029-26	MOM ON	NONE	ON
MS75029-27	MOM ON	OFF	MOM ON
MS75029-31	MOM ON	OFF	ON

Switches specified herein are designed so that the movement of the switch mechanism is opposite the toggle lever, with the exception if -22 and -23 in which the toggle movement is the same as the switch mechanism.

Weight: .02 pound max

Electrical ratings

At 30 V dc

Resistive load: 5.0 amperes.

Inductive load. 2 0 amperes

Lamp load· 1.0 ampere

At 115 V ac, 400 Hz·

Resistive load· 5 0 amperes

Inductive load. 2 0 amperes

Lamp load: 1 0 ampere.

Strength of pivot and lever stop 12 pounds minimum for lever and 7 2 pounds minimum for pivot

Sand and dust Toggle boot shall be used in meeting sand and dust test

Marking Marking, including terminal marking, may be on either side of the switch.

CONCLUDING MATERIAL

Custodians
Army - ER
Navy - EC
Air Force - 85

Review activity
Army - AV
Navy - AS
Air Force -99
DLA - ES

Preparing activity
Air Force - 85

Agent.
DLA - ES

(Project 5930-1495-02)