FED. SUP CLASS
5930

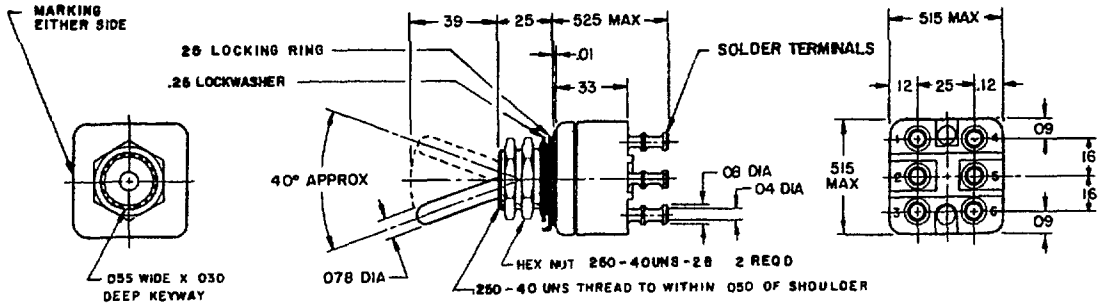

MS75075-1

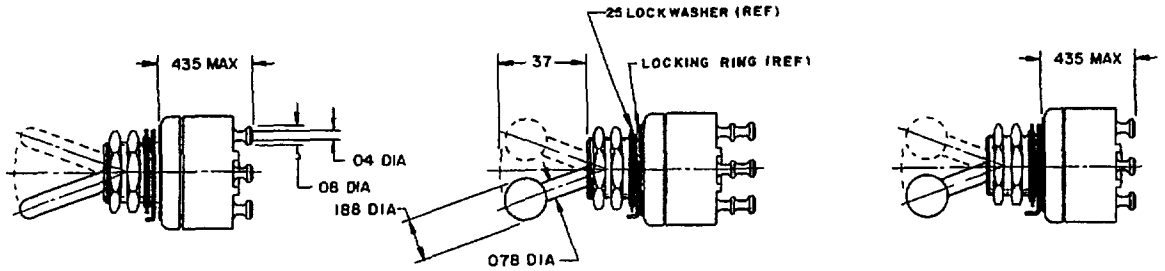

MS75075-3
(SAME AS MS-1
EXCEPT AS SHOWN)

MS75075-2
(SAME AS MS-1
EXCEPT AS SHOWN)

MS75075-4
(SAME AS MS-2
EXCEPT AS SHOWN)

1. ALL DIMENSIONS ARE IN INCHES
2. UNLESS OTHER WISE SPECIFIED, TOLERANCE IS ± .020 ON TWO PLACE DECIMALS AND ± .005 ON THREE PLACE DECIMALS
3. CONTOUR OF SWITCH IS OPTIONAL PROVIDED MAXIMUM DIMENSIONS SPECIFIED ARE NOT EXCEEDED
4. FOR HARDWARE DETAIL SPECIFICATIONS, SEE SUPPLEMENT MIL-S-83731 (C)

DETAIL REQUIREMENTS

MS PART NUMBER	CIRCUIT WITH TOGGLE LEVER IN			CURRENT CAPACITY (AMPERES)			
	KEYING SIDE	CENTER	OPPOSITE KEYING SIDE	28 VOLTS DC (SEA LEVEL)		28 VOLTS DC (70,000 FT)	115 VOLTS 60 Hz (SEA LEVEL)
				RESISTIVE	INDUCTIVE	INDUCTIVE	RESISTIVE
-1 -2 -3 -4	MAINTAINED 2-3 5-6	NONE	MAINTAINED 1-2 4-5	7	2.5	2.0	1.5

1. ALL SWITCHES ON THIS STANDARD ARE DESIGNED SO THAT THE MOVEMENT OF THE SWITCH MECHANISM IS SAME AS THE TOGGLE LEVER
2. MAXIMUM WEIGHT IS .01 POUND.
3. BLACK FINISH ON BUSHING
4. NON-NUTRIENT FUNGUS RESISTANT CASE MATERIAL PER MIL-M-14

6. STRENGTH OF ACTUATING LEVER PIVOT AND LEVER STOP TEST SHALL BE PERFORMED AT 8 POUNDS
7. DIELECTRIC STRENGTH AFTER ELECTRICAL ENDURANCE IS 300 VOLTS FROM TERMINALS TO GROUND
8. TERMINALS WILL ACCEPT 18 AWG WIRE

NOTES
1. REFERENCED DOCUMENTS SHALL BE OF THE ISSUE IN EFFECT ON THE DATE OF INVITATIONS TO BID
2. FOR DESIGN FEATURE PURPOSES, THIS STANDARD TAKES PRECEDENCE OVER PROCUREMENT DOCUMENTS REFERENCED HEREIN

APPROVED 30 JUNE 67 REVISED (A) 25 MARCH 1968 (B) 22 APRIL 1971 (C) 22 MAY 1972

P.A. AIR FORCE-80 Other Cust ARMY-EL NAVY-EC	TITLE SWITCH, TOGGLE, TWO POLE, UNSEALED	MILITARY STANDARD MS75075
PROCUREMENT SPECIFICATION MIL-S-83731 (C)	SUPERSEDES	SHEET 1 OF 1

Reviewer AF II, AV, AS, ES

This military standard is approved by the Department of Defense and is mandatory on all activities. Selection for all new engineering and design applications and for repetitive use shall be made from this document