FED. SUP CLASS
5930

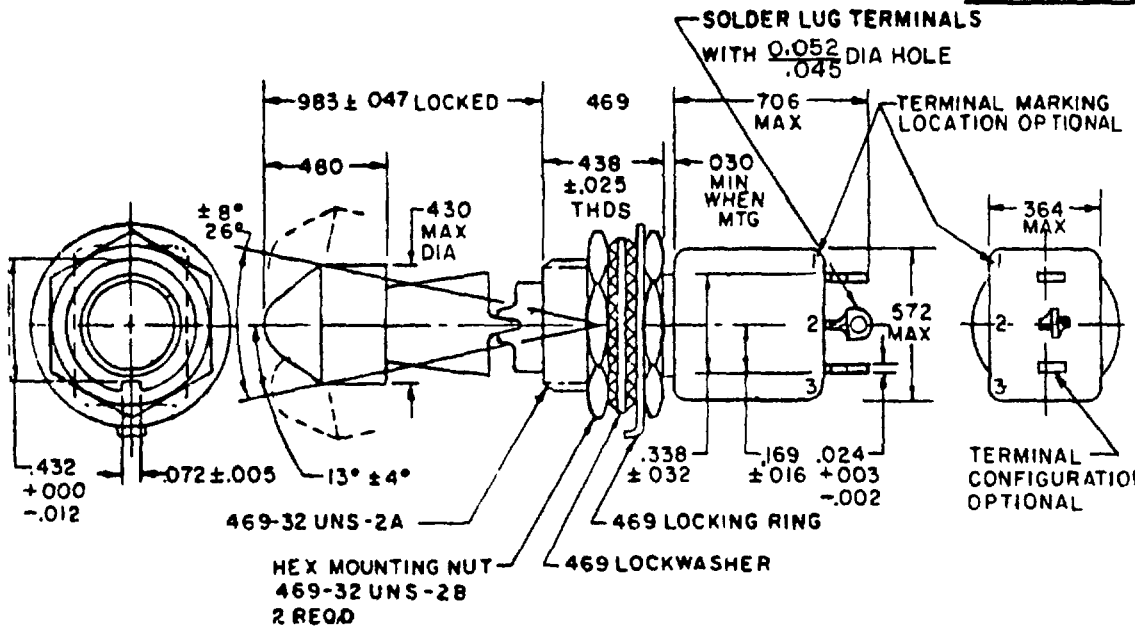

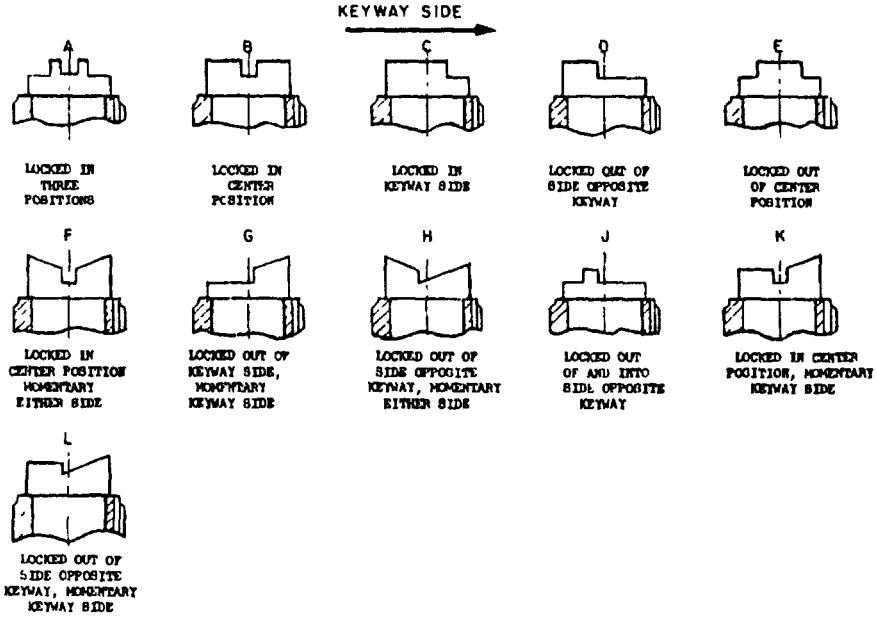

FIGURES A THRU L ILLUSTRATE THE LOCKING AND MOMENTARY CONFIGURATION AND NOT THE DETAIL CONSTRUCTION OF THE LOCKING DESIGN

(F) denotes change.

P A AF-85 Other Cust ARMY - ER NAVY - AS	International interest ASCCAS 12/16A	TITLE SWITCH TOGGLE POSITIVE BREAK LEVER LOCK, MINIATURE TOGGLE SEALED SOLDER LUG SINGLE POLE 469 MOUNTING BUSHING	MILITARY STANDARD MS21026

APPROVED 13 Jun 66 REVISED (F) 18 OCT 1985

User activities Army - Navy - Air Force -
Review activities Army - Navy - Air Force - AR, AV C 17 on

tary standard is approved for use by all Departments and Agencies of the t of Defense Selection for all new engineering and design applications epetitive use shall be made from this document when applicable

DETAIL REQUIREMENTS

MS DASH NO	LOCKING COMB	CIRCUIT MADE BETWEEN TERMINALS AS INDICATED WITH THE TOGGLE LEVER IN THESE POSITIONS(a)			CURRENT CAPACITY IN AMPERES						LIFE LOW CURRENT LEVEL SWITCHING 5 mV
					RESISTIVE LOAD			INDUCTIVE LOAD			
					28 VOLTS DC	115 VOLTS 60 HERTZ AC	115 VOLTS 400 HERTZ AC	28 VOLTS DC	115 VOLTS 60 HERTZ AC	115 VOLTS 400 HERTZ AC	
		OPPOSITE KEYWAY SIDE (d)	CENTER POSITIONS	KEYWAY SIDE (d)							
-211	A, B, C, D, E	ON 2-3	OFF	ON 1-2	5	2	3	(b) 1	1	2	(c) 25 µA
-221	C, E		NONE	OFF							
-231				ON 1-2							
-241	J, B		OFF	NONE							
-271	F, H	MOM-ON 2-3	OFF	MOM-ON 1-2							
-281	K	NONE									
-311	G, K, L	ON 2-3									

(a) Direction of movement of internal mechanism is opposite to the direction of the toggle movement
(b) With time constant of 020 ± 002 seconds
(c) Contact resistance not to exceed 50 ohms during life, low current level switching
(d) Non-functional terminals shall not be supplied

INCHES	MM	INCHES	MM	INCHES	MM	INCHES	MM	INCHES	MM
.002	05	016	41	045	1 14	338	8 59	469	11 91
003	08	024	61	047	1 19	364	9 25	480	12 19
005	13	025	64	052	1 32	430	10 92	572	14 53
010	25	030	76	072	1 83	432	10 97	706	17 93
012	30	032	81	169	4 29	438	11 13	983	24 97

(F) NOTES

1. Dimensions are in inches
2. Metric equivalents are given for general information only.
3. Unless otherwise specified, tolerances are ± 010 (0 25 mm) on decimals and ± 5° on angles.
4. For hardware detail specifications see appendix of MIL-S-8834
5. In the event of a conflict between the text of this standard and the references cited herein, the text of this standard shall take precedence
6. Referenced Government documents of the issue listed in that issue of the *Department of Defense Index of Specifications and Standards (DoDISS)* specified in the solicitation form a part of this standard to the extent specified herein
7. Shock Method I and Method II (high impact). The switch shall be electrically and mechanically operative at the conclusion of the shock test except there can be mechanical transfer of the contact mechanism at all levels when tested in accordance with Method II (high impact)
8. Toggle seal test Method II
9. Part number shall consist of MS number, locking combination letter and dash number
10. Example part number
    MS21026B211 - Toggle sealed, on-off-on, locked in center position
    MS21026K281 - Toggle sealed, none-off-momentary on, locked in center position
11. Strength of terminals 5 pounds normal to the mounting plane and 2 pounds in other planes
12. Altitude 50,000 feet
13. 115 V ac, 60 hertz electrical endurance tests are to be performed at room temperature and pressure
14. Maximum weight 0593 pound (26 9 grams)
15. Unlocking force 4 ±1 pound.
16. Configuration of switch case housing, terminals and barriers Design optional providing maximum dimensions specified are not exceeded

User activities Army - MI Navy - Air Force -
Review activities Army - AR, AV Navy - EC Air Force - 11, 17, 99
ry standard is approved for use by all Departments and Agencies of the of Defense Selection for all new engineering and design applications stitive use shall be made from this document when applicable

APPROVED 13 Jun 66 REVISED (F) FOR CHANGE SEE PAGE 2