THIS SPECIFICATION REQUIREMENTS FOR ACQUIRING THE PRODUCT(S) DESCRIBED HEREIN SHALL CONSIST OF THIS SPECIFICATION
APPROVED FOR USE BY AND THE ISSUE OF THE FOLLOWING SPECIFICATION LISTED IN THAT ISSUE OF THE DODISS
of the Department of Defense. SOLICITATION: MIL-S-8834.
all Departments and Agencies

Form Approved
OMB No 0704-0188

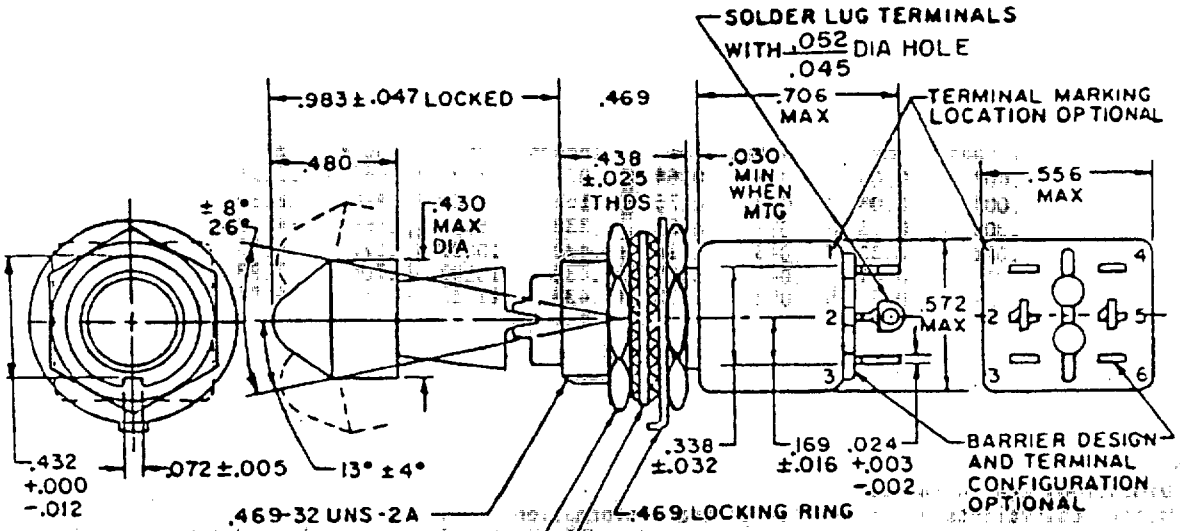

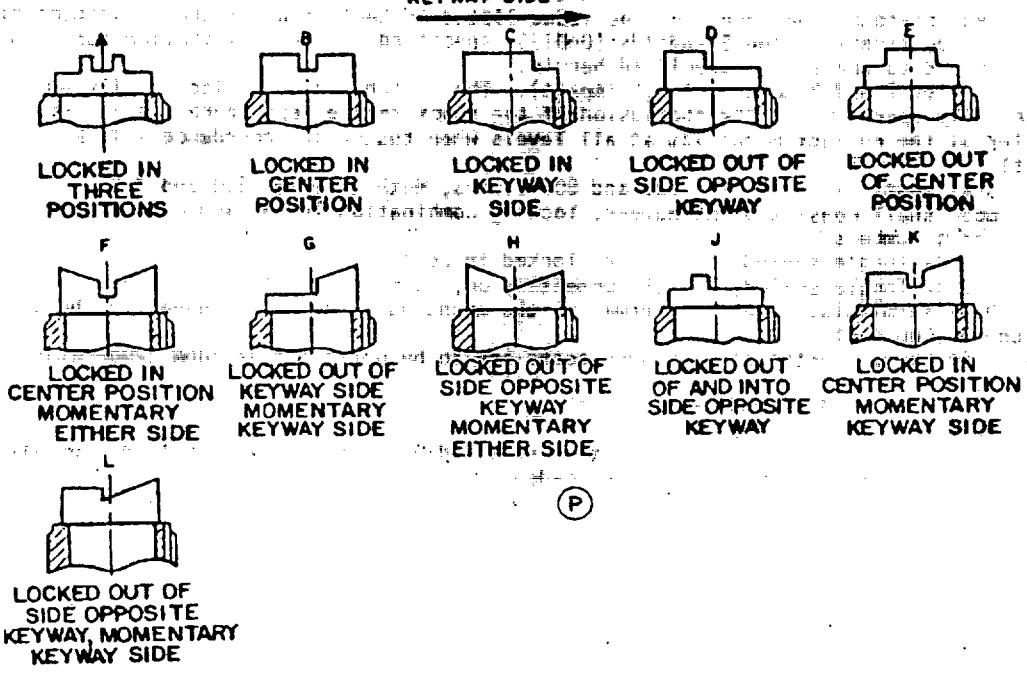

FIGURES A THRU L ILLUSTRATE THE LOCKING AND MOMENTARY CONFIGURATION AND NOT THE DETAIL CONSTRUCTION OF THE LOCKING DESIGN.

(P) Denotes changes

PREPARING ACTIVITY: Air Force-85 CUSTODIANS: ARMY - NAVY - AS AIR FORCE - DLA - (P) REVIEW: Air Force-99 Navy-EC USER: Army-MI PROJECT NUMBER: 5930-1454-04	MILITARY SPECIFICATION SHEET TITLE SWITCH, TOGGLE, POSITIVE BREAK, LEVER LOCK, MINIATURE, TOGGLE SEALED, SOLDER LUG, DOUBLE POLE, .469 MOUNTING BUSHING	SPECIFICATION SHEET NUMBER MS21027P 4 Sep 1991 SUPERSEDING MS21027N 15 Dec 1989 AMSC N/A FSC 5930
DISTRIBUTION STATEMENT A: Approved for public release; distribution is unlimited		Page 1 of 3

THE REQUIREMENTS FOR ACQUIRING THE PRODUCT(S) DESCRIBED HEREIN SHALL CONSIST OF THIS SPECIFICATION SHEET AND THE ISSUE OF THE FOLLOWING SPECIFICATION LISTED IN THAT ISSUE OF THE DODISS SPECIFIED IN THE SOLICITATION:

THIS SPECIFICATION IS APPROVED FOR USE BY all Departments and Agencies of the Department of Defense.

Form Approved
OMB No. 0704-0188

Inches	mm	Inches	mm	Inches	mm	Inches	mm
.002	0.05	.025	0.64	.072	1.83	.469	11.91
.003	0.08	.030	0.76	.169	4.29	.480	12.19
.005	0.13	.032	0.81	.338	8.59	.556	14.12
.012	0.30	.045	1.14	.430	10.92	.572	14.53
.016	0.41	.047	1.19	.432	10.97	.706	17.93
.024	0.61	.052	1.32	.438	11.13	.983	24.97

NOTES:
1. Dimensions are in inches.
2. Metric equivalents are given for general information only.
3. Unless otherwise specified, tolerances are ±.010 (0.25 mm) on decimals and ±.5° on angles.
4. For hardware detail specification see appendix of MIL-S-3924.
5. In the event of a conflict between the text of this standard and the references cited herein, the text of this standard shall take precedence.
6. Referenced Government documents of the issue listed in that issue of the Department of Defense Index of Specifications and Standards (DoDISS) specified in the solicitation form a part of this standard to the extent specified herein.
7. Shock: Method I and Method II (high impact). The switch shall be electrically and mechanically operative at the conclusion of the shock test except there can be mechanical transfer of the contact mechanism at all levels when tested in accordance with Method II (high impact).
8. Toggle seal test: Method I for 700 and 800 series, Method II for 200 and 300 series.
9. Part number shall consist of MS number, locking combination letter and dash number.
10. Example part numbers:
(P) MS21027-B211- Toggle sealed, on-off-on, locked in center position.
(P) MS21027-K281- Toggle sealed, non-off-momentary on, locked in center position.
11. Strength of terminals: 5 pounds normal to the mounting plane and 2 pounds in the other planes.
12. Altitude 50,000 feet.
13. 115 V ac 60 hertz electrical endurance tests are to be performed at room temperature and pressure.
14. Maximum weight: .0640 pound (29.0 grams).
15. Unlocking force: 4 ±1 pound.
16. Configuration of switch case housing, terminals and barriers: Design optional providing maximum dimensions specified are not exceeded.

(P)

THIS SPECIFICATION APPROVED FOR USE BY all Departments and Agencies of the Department of Defense.

THE REQUIREMENTS FOR ACQUIRING THE PRODUCT(S) DESCRIBED HEREIN SHALL CONSIST OF THIS SPECIFICATION AND THE ISSUE OF THE FOLLOWING SPECIFICATION LISTED IN THAT ISSUE OF THE DODISS ... ED IN SOLICITATION:

Form Approved
OMB No. 0704-0188

(P) Detail requirements:

MS dash number 1/		Locking combination	Circuit made between terminals as indicated with the toggle level in these positions: 5/			Current capacity in amperes						Low current level switching 5 mV
						Resistive load			Inductive load			
			Opposite keyway side 8/	Center position	Keyway side 8/	28 volts	115 volts 60 Hz ac	115 volts 400 Hz ac	28 volts	115 volts 60 Hz ac	115 volts 400 Hz ac	
-711	-211	A, B, D	On 2-3, 5-6	Off	On 1-2, 4-5							
-721	-221	C, E		None	Off							
-731	-231				On 1-2, 4-5							
-741	-241	J, B		Off	None							
-771 4/	-271 4/	F, H	Mom-on 2-3, 5-6	Off	Mom-on 1-2, 4-5							
-781 4/	-281 4/	K	None									
-811	-311	G, K, L	On 2-3, 5-6									
-821 2/ 3/	-321	K	None	On 2-3, 5-6	Mom-on 1-2, 4-5	5	2	3	6/ 1	1	2	7/ 25 μA
-831 2/ 3/	-331	A, B, C and D	On 2-3, 5-6	On 2-3, 4-5	On 1-2, 4-5							
-841 2/ 3/	-341	F, H	Mom-on 2-3, 5-6	On 2-3, 4-5	Mom-on 1-2, 4-5							
-851 2/ 3/	-351	G, K, L	On 2-3, 5-6	On 2-3, 4-5	Mom-on 1-2, 4-5							
-871	-371	F, H	Mom-on 2-3, 5-6	Off	Mom-on 1-2, 4-5							
-881	-381	K	None	Off	Mom-on 1-2, 4-5							

See footnote 2/

(P) 1/ 700 and 800 series toggle seal (water) 15' head; 200 and 300 series toggle seal (water) 1/2" head.
2/ Delayed action of the switch toggle lever may cause circuit to close or open before snap action mechanism trips.
3/ Dielectric withstanding voltage: 1200 V rms at sea level (center on circuits).
4/ Part number -771, -781, -271, and -281 are inactive for new design, use -871, -881, -371, and -381.
5/ Direction of movement of internal mechanism is opposite to the direction of the toggle movement.
6/ With time constant of .020 ±.002 second.
7/ Contact resistance not to exceed 50Ω during life, low current level switching.
8/ Nonfunctional terminals shall not be supplied.

PREPARING ACTIVITY: Air Force-85 CUSTODIANS: ARMY - NAVY - AS AIR FORCE - DLA - (P) REVIEW: Air Force-99 Navy-EC USER: Army-MI PROJECT NUMBER: 5930-1454-04	MILITARY SPECIFICATION SHEET TITLE SWITCH, TOGGLE, POSITIVE BREAK, LEVER LOCK, MINIATURE, TOGGLE SEALED, SOLDER LUG, DOUBLE POLE, .469 MOUNTING BUSHING	SPECIFICATION SHEET NUMBER MS21027P SUPERSEDING MS21027N 15 Dec 1989 AMSC N/A FSC 5930
DISTRIBUTION STATEMENT		Page 3 of 3