FED SUP CLASS
5930

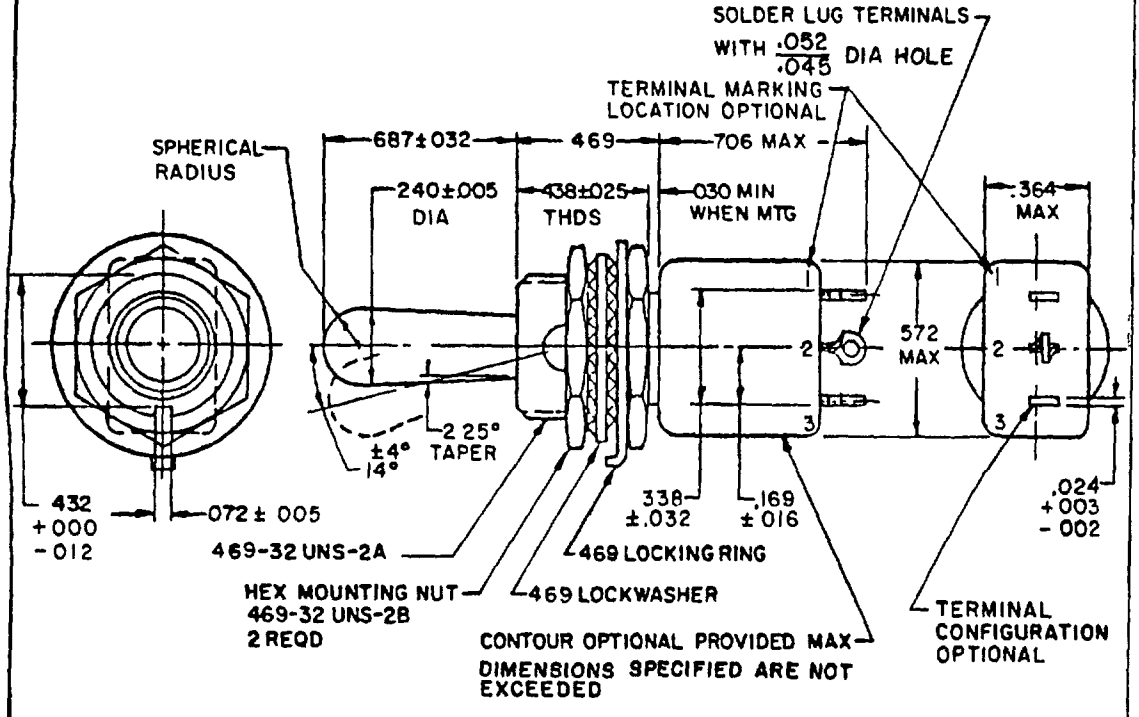

DETAIL REQUIREMENTS

MS DASH NO 1/	CIRCUIT MADE BETWEEN TERMINALS AS INDICATED WITH TOGGLE LEVER IN THESE POSITIONS (a)			CURRENT CAPACITY IN AMPERES						LIFE LOW CURRENT LEVEL SWITCHING 5 mV
				RESISTIVE LOAD			INDUCTIVE LOAD			
				28 VOLTS DC	115 VOLTS 60 HERTZ AC	115 VOLTS 400 HERTZ AC	28 VOLTS DC	115 VOLTS 60 HERTZ AC	115 VOLTS 400 HERTZ AC	
	OPPOSITE KEYWAY SIDE	CENTER POSITION	KEYWAY SIDE							
-321	NONE	2-3 ON	1-2 MOM-ON	5	2	3	(b) 1	1	2	(c) 25 μA

(a) Direction of movement of internal mechanism is opposite to the direction of the toggle movement
(b) With time constant of .020 ±.002 seconds.
(c) Contact resistance not to exceed 50 ohms during life, low current level switching

1/ Delayed action of the switch toggle lever may cause circuit to close or open before snap action mechanism trips.

(F) Denotes change

APPROVED 17 May 72 REVISED (F) 18 OCT 1985

This military standard is approved for use by all Departments and Agencies of the Department of Defense. Selection for all new engineering and design applications and for repetitive use shall be made from this document when applicable.

User activities. Army MI Navy Air Force
Reviewer activities Army AR, AV Navy EC Air Force 11, 17, 99

P A AF - 85 Other Cust ARMY - ER NAVY - AS	International interest	TITLE SWITCH, TOGGLE, POSITIVE BREAK, SPECIAL CIRCUIT, MINIATURE, TOGGLE SEALED, SOLDER LUG, SINGLE POLE, 469 MOUNTING BUSHING	MILITARY STANDARD MS21351
Procurement Specification MIL-S-8834		SUPERSEDES MS0021351 (USAF)	PAGE 1 OF 2

DD FORM 1 SEP 63 672 (Coordinated) PREVIOUS EDITIONS OF THIS FORM ARE OBSOLETE 5930-1275-4

Distribution Statement A Approved for public release, distribution is unlimited.

INCH	MM	INCH	MM	INCH	MM
.002	.05	032	81	.364	9.25
.003	.08	045	1 14	.432	10.97
.005	.13	052	1 32	.438	11.13
.010	.25	.072	1 83	.469	11.91
.012	.30	169	4 29	.572	14.53
.016	.41	240	6 10	.687	17.45
.024	.61	.338	8 59	.706	17.93
.025	.64	351	8 92		
.030	.76				

(F) NOTES·

1 Dimensions are in inches.
2. Metric equivalents are given for general information only
3. Unless otherwise specified, tolerances are ±.010 (0.25 mm) on decimals and ± 5° on angles.
4. For hardware detail specifications see appendix of MIL-S-8834
5. In the event of a conflict between the text of this standard and the references cited herein, the text of this standard shall take precedence
6. Referenced Government documents of the issue listed in that issue of the Department of Defense Index of Specifications and Standards (DoDISS) specified in the solicitation form a part of this standard to the extent specified herein.
7. Shock: Method I and Method II (high impact). The switch shall be electrically and mechanically operative at the conclusion of the shock test except there can be mechanical transfer of the contact mechanism at all levels when tested in accordance with Method II (high impact)
8. Toggle seal test: Method II.
9 Weight· .0429 pound maximum (19.4 grams)
10 Strength of terminal· 5 pounds pull perpendicular to mounting plane and 2 pounds in other planes
11 Dielectric withstanding voltage. 1,200 V rms at sea level
12 Altitude 50,000 feet
13. 115 V ac, 60 hertz electrical endurance tests are to be performed at room temperature and pressure

APPROVED 17 May 72 REVISED (F) FOR CHANGE SEE PAGE 2

User activities Army - MI Navy - Air Force -
Review activities Army - AR, AV Navy - EC Air Force - 11,17,99
This military standard is approved for use by all Departments and Agencies of the Department of Defense Selection for all new engineering and design applications and for repetitive use shall be made from this document when applica