THIS SPECIFICATION APPROVED FOR USE BY all Departments and Agencies of the Department of Defense

REQUIREMENTS FOR ACQUIRING THE PRODUCT(s) DESCRIBED HEREIN SHALL CONSIST OF THIS SPECIFICATION AND THE ISSUE OF THE FOLLOWING SPECIFICATION LISTED IN THAT ISSUE OF THE DODISS LISTED IN . . SOLICITATION MIL-S-8834

Form Approved
OMB No 0704-0188

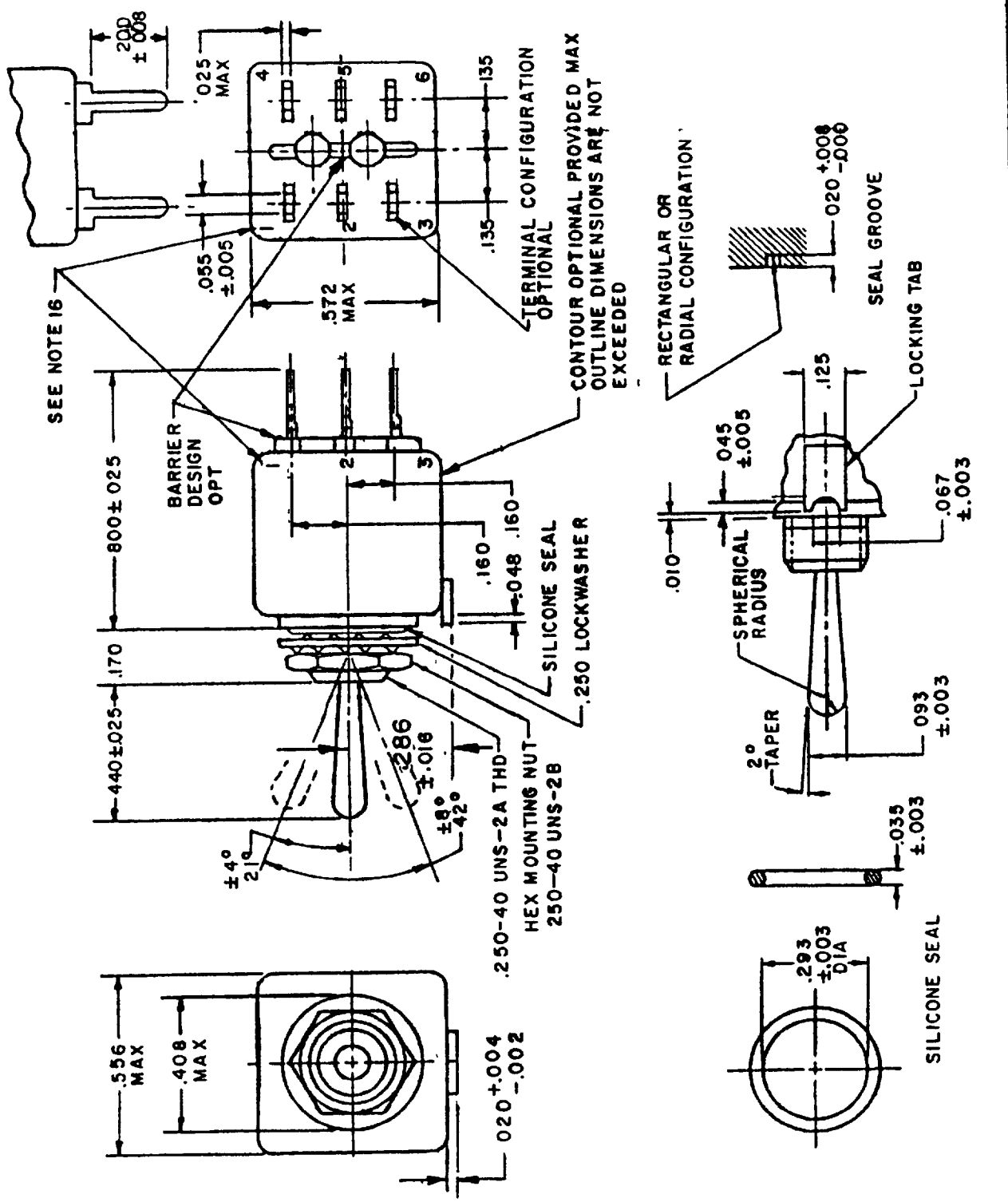

(J) Denotes changes

PREPARING ACTIVITY Air Force-85 CUSTODIANS ARMY NAVY-AS AIR FORCE DLA (J) Air Force-99 Navy-EC REVIEW Army-MI USER PROJECT NUMBER 5930-1454-02	MILITARY SPECIFICATION SHEET TITLE SWITCH, TOGGLE, POSITIVE BREAK, MINIATURE, TOGGLE SEALED, PRINTED CIRCUIT BOARD TERMINALS, DOUBLE POLE, .250 MOUNTING BUSHING	SPECIFICATION SHEET NUMBER MS21355J 4 Sep 1991 SUPERSEDING MS21355H 15 Dec 1989 AMSC N/A FSC 5930

DISTRIBUTION STATEMENT A: Approved for public release, distribution is unlimited

DD Form 672, MAY 88 Previous editions are obsolete

THE REQUIREMENTS FOR ACQUIRING THE PRODUCT(s) DESCRIBED HEREIN SHALL CONSIST OF THIS SPECIFICATION SHEET AND THE ISSUE OF THE FOLLOWING SPECIFICATION LISTED IN THAT ISSUE OF THE DODISS SPECIFIED IN THE SOLICITATION

Form Approved
OMB No. 0704 0188

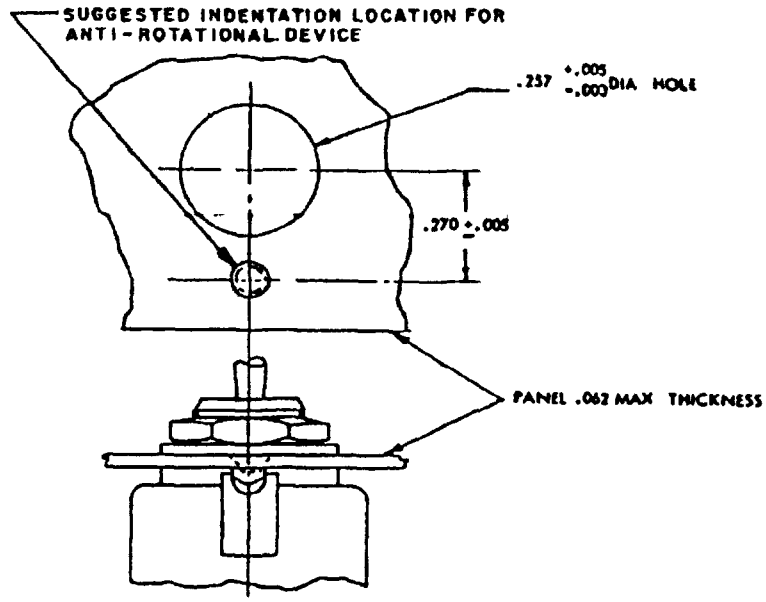

Inches	mm	Inches	mm	Inches	mm	Inches	mm
.002	0.05	.025	0.64	.125	3.18	.286	7.26
.003	0.08	.035	0.89	.135	3.43	.293	7.44
.004	0.10	.045	1.14	.160	4.06	.408	10.36
.005	0.13	.048	1.22	.170	4.32	.440	11.18
.008	0.20	.055	1.40	.200	5.08	.556	14.12
.010	0.25	.062	1.57	.250	6.35	.572	14.53
.016	0.41	.067	1.70	.257	6.53	.800	20.32
.020	0.51	.093	2.36	.270	6.86		

NOTES:

1. Dimensions are in inches.
2. Metric equivalents are given for general information only.
3. Unless otherwise specified, tolerances are ±.010 (0.25 mm) on decimals and ±5° on angles.
4. For hardware detail specification see appendix of MIL-S-8834.
5. In the event of a conflict between the text of this standard and the references cited herein, the text of this standard shall take precedence.
6. Referenced Government documents of the issue listed in that issue of the Department of Defense Index of Specifications and Standards (DODISS) specified in the solicitation shall form a part of this standard to the extent specified herein.
7. Dielectric withstanding voltage: For center on circuit's, DWV shall be 1200 V rms at sea level.
8. 115 V ac 60 hertz electrical endurance tests are to be performed at room temperature and pressure.
9. Switches shall be rigidly mounted by their normal means on a rigid metal panel and subjected to shock test, method 207, of MIL-STD-202. The switch shall be electrically and mechanically operative at the conclusion of the test and there shall be no mechanical transfer during the text.
10. Terminals: Gold plated.
11. Suitable for mounting on panels .062 inches (1.57 mm) maximum thickness.
12. (J) Weight: .0143 pound maximum (6.5 grams).
13. Strength of terminals: 5 pounds normal to the mounting plane and 1 pound in other planes.
14. Altitude: 50,000 feet.
15. Strength of actuator: Lever pivot and lever stop 6 pounds.
16. Terminals need not be marked. Terminal identification is shown for reference purposes only.

THIS SPECIFICATION IS APPROVED FOR USE BY all Departments and Agencies of the Department of Defense

PREPARING ACTIVITY Air Force-85 CUSTODIANS ARMY NAVY AS AIR FORCE DLA (J) Air Force-99 Navy-EC REVIEW Army-MI USER PROJECT NUMBER 5930-1454-08	MILITARY SPECIFICATION SHEET TITLE SWITCH, TOGGLE, POSITIVE BREAK, MINIATURE, TOGGLE SEALED, PRINTED CIRCUIT BOARD TERMINALS, DOUBLE POLE, .250 MOUNTING BUSHING	SPECIFICATION SHEET NUMBER MS21355 J SUPERSEDING MS 21355H 15 Dec 1989 AMSC N/A FSC 5930
DISTRIBUTION STATEMENT		Page 2 of 3

THE REQUIREMENTS FOR ACQUIRING THE PRODUCT(S) DESCRIBED HEREIN SHALL CONSIST OF THIS SPECIFICATION AND THE ISSUE OF THE FOLLOWING SPECIFICATION LISTED IN THAT ISSUE OF THE DODISS SPECIFIED IN SOLICITATION

THIS SPECIFICATION IS APPROVED FOR USE BY all Departments and Agencies of the Department of Defense

Form Approved
OMB No 0704-0188

(J) Detail requirements:

MS dash no.	Circuit made between terminals as indicated with the toggle lever in these positions: (a)			Current capacity in amperes						Low current level switching 5 mV
				Resistive load			Inductive load			
	Opposite locking tab side (d)	Center position	Locking tab side (d)	28 V dc	115 V 60 Hz ac	115 V 400 Hz ac	28 V dc	115 V 60 Hz ac	115 V 400 Hz ac	
-211	on 2-3 5-6	off	on 1-2, 4-5	5	2	3	(b) 1	1	2	(c) 25 µA
-221		none	off							
-231		off	on 1-2, 4-5							
-241			none							
-271	mom-on 2-3, 5-6		mom-on 1-2 4-5							
-281	none									
-311	on 2-3, 5-6									
-321 (e)	none	on 2-3, 5-6								
-331 (e)	on 2-3, 5-6	2-3 on 4-5	on 1-2, 4-5							
-341 (e)	mom-on 2-3, 5-6		mom-on 1-2, 4-5							
-351 (e)	on 2-3, 5-6									

SEE NOTE (e)

(a) Direction of movement of internal mechanism is opposite to the direction of the toggle movement.
(b) With time constant of .020 ±.002 seconds.
(c) Contact resistance not to exceed 50Ω during life, low current level switching.
(d) Non-functional terminals shall not be supplied.
(e) Delayed action of the switch toggle lever may cause circuit to close or open before snap action mechanism trips

PREPARING ACTIVITY Air Force-85 CUSTODIANS ARMY NAVY-AS AIR FORCE - DLA (J) REVIEW Air Force-99 Navy-EC Army-MI USER PROJECT NUMBER 5930-1454-02	MILITARY SPECIFICATION SHEET TITLE SWITCH, TOGGLE, POSITIVE BREAK, MINIATURE, TOGGLE SEALED, PRINTED CIRCUIT BOARD TERMINALS, DOUBLE POLE, .250 MOUNTING BUSHING	SPECIFICATION SHEET NUMBER MS21355 J SUPERSEDING MS21355H 15 Dec 1989 AMSC N/A FSC 5930
DISTRIBUTION STATEMENT		Page 3 of 3