THIS SPECIFICAT APPROVED FOR USE BY all Departments and Agencies
of the Dep. nt of Defense
REQUIREMENTS FOR ACQUIRING THE PRODUCT(S) DESCRIBED HEREIN SHALL CONSIST OF THIS SPECIFICATION
T AND THE ISSUE OF THE FOLLOWING SPECIFICATION LISTED IN THAT ISSUE OF THE DODISS FIED IN
SOLICITATION MIL-S-8834

Form Approved
OMB No 0704 0188

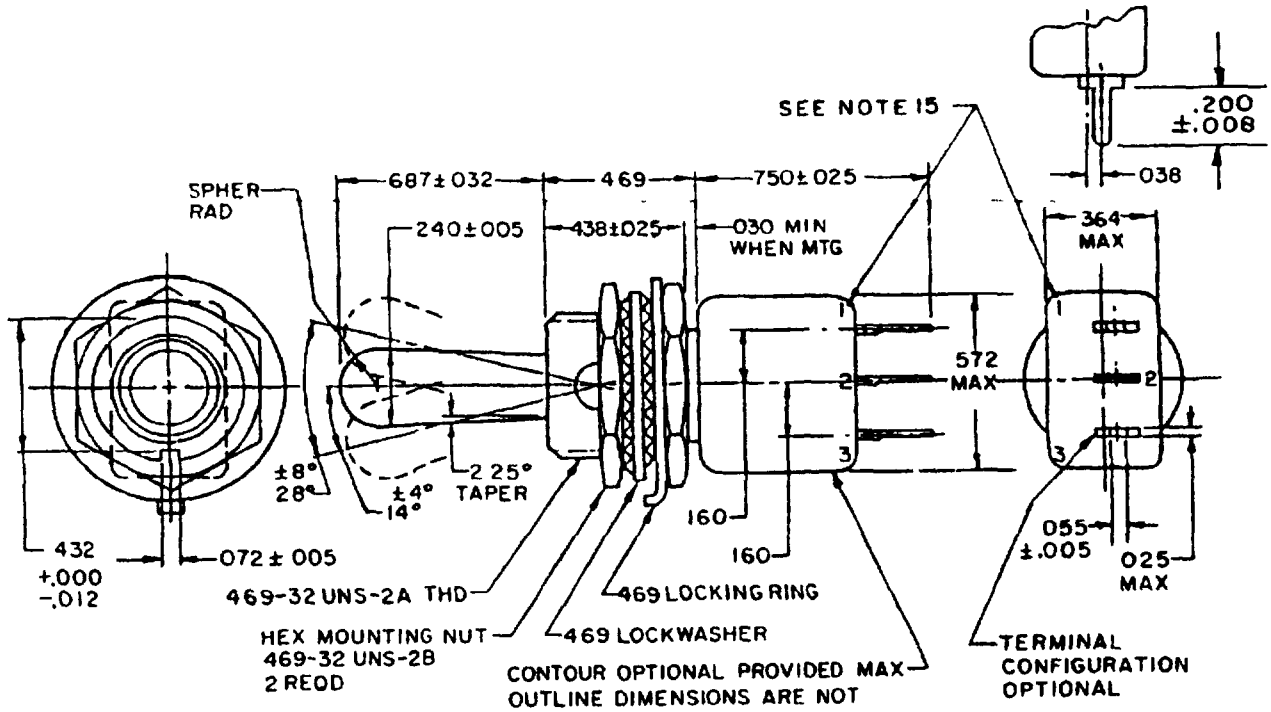

Inches	mm	Inches	mm	Inches	mm
.005	0.13	.038	0.97	.364	9.25
.008	0.20	.055	1.40	.432	10.97
.012	0.30	.072	1.83	.438	11.13
.025	0.64	.160	4.06	.469	11.91
.030	0.76	.200	5.08	.572	14.53
.032	0.81	.240	6.10	.687	17.45
				.750	19.05

NOTES.
1. Dimensions are in inches.
2. Metric equivalents are given for general information only.
3. Unless otherwise specified, tolerances are ±.010 (0.25 mm) on decimals and ±5° on angles.
4. For hardware detail specification see appendix of MIL-S-8834.
5. In the event of a conflict between the text of this standard and the references cited herein, the text of this standard shall take precedence.
6. Referenced Government documents of the issue listed in that issue of the Department of Defense Index of Specifications and Standards (DODISS) specified in the solicitation shall form a part of this standard to the extent specified herein.
7. Dielectric withstanding voltage: For center on circuits, DWV shall be 1200 V rms at sea level.
8. Toggle seal test: Method II.
9. The switch shall be electrically and mechanically operative at the conclusion of the shock test with 2000 foot pounds except there can be transfer of the contact mechanism at all levels when tested in accordance with MIL-STD-202, method 207.
10. Terminals. Gold plated.
11. Weight: .0429 pound maximum (19.4 grams).
12. Strength of terminals: 5 pounds normal to the mounting plane and 1 pound in other planes.
13. Altitude: 50,000 feet.
14. 115 V ac 60 hertz electrical endurance tests are to be performed at room temperature and pressure.
15. Terminals need not be marked. Terminal identification is shown for reference purposes only.

(H) Denotes changes

PREPARING ACTIVITY Air Force-85 CUSTODIANS ARMY NAVY AS AIR FORCE DLA REVIEW Air Force-11, 99 Navy-EC USER PROJECT NUMBER 5930-1454-03	MILITARY SPECIFICATION SHEET TITLE SWITCH, TOGGLE, POSITIVE BREAK, MINIATURE, TOGGLE SEALED, PRINTED CIRCUIT BOARD TERMINALS, SINGLE POLE, 469 MOUNTING BUSHING	SPECIFICATION SHEET NUMBER MS21356H 4 Sep 1991 SUPERSEDING MS21356G 15 Dec 1989 AMSC N/A FSC 5930
DISTRIBUTION STATEMENT A Approved for public release, distribution is unlimited		Page 1 of 2

DD Form 672, MAY 88 Previous editions are obsolete

Detail requirements.

(H)

MS dash no.	Circuit made between terminals as indicated with the toggle lever in these positions: (a)			Current capacity in amperes						Low current level switching 5 mV
				Resistive Load			Inductive Load			
				28 V dc	115 V 60 Hz ac	115 V 400 Hz ac	28 V dc	115 V 60 Hz ac	115 V 400 Hz ac	
	Opposite keyway side (d)	Center position	Keyway tab side (d)							
-211	on 2-3	off	on 1-2	5	2	3	(b) 1	1	2	(c) 25 µA
-221		none	off							
-231			on 1-2							
-241		off	none							
-271	mom-on 2-3		mom-on 1-2							
-281	none									
-311	on 2-3									
-321 (e)	none	on 2-3								

SEE NOTE (e)

(H) (a) Direction of movement of internal mechanism is opposite to the direction of the toggle movement.
(b) With time constant of .020 ±.002 seconds.
(c) Contact resistance not to exceed 50Ω during life, low current level switching.
(d) Non-functional terminals shall not be supplied.
(H) (e) Delayed action of the switch toggle lever may cause circuit to close or open before snap action mechanism trips.

PREPARING ACTIVITY: Air Force-85
CUSTODIANS: ARMY AS; NAVY; AIR FORCE; DLA
REVIEW: Air Force-11, 99 Navy-EC
USER
PROJECT NUMBER: 5930-1454-03
DISTRIBUTION STATEMENT

MILITARY SPECIFICATION SHEET
TITLE: SWITCH, TOGGLE, POSITIVE BREAK, MINIATURE, TOGGLE SEALED, PRINTED CIRCUIT BOARD TERMINALS, SINGLE POLE, 469 MOUNTING BUSHING

SPECIFICATION SHEET NUMBER: MS21356H
SUPERSEDING: MS21356G
15 Dec 1989
AMSC N/A
FSC 5930

DD Form 672, MAY 88
Previous editions are obsolete
Form Approved OMB No 0704 0188