FED. SUP CLASS
5930

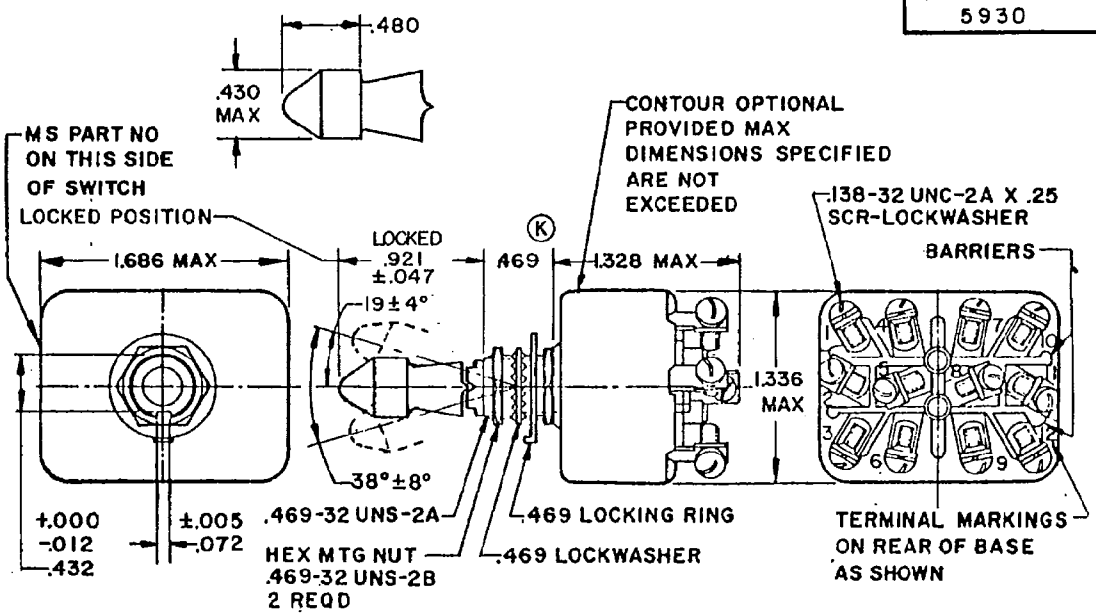

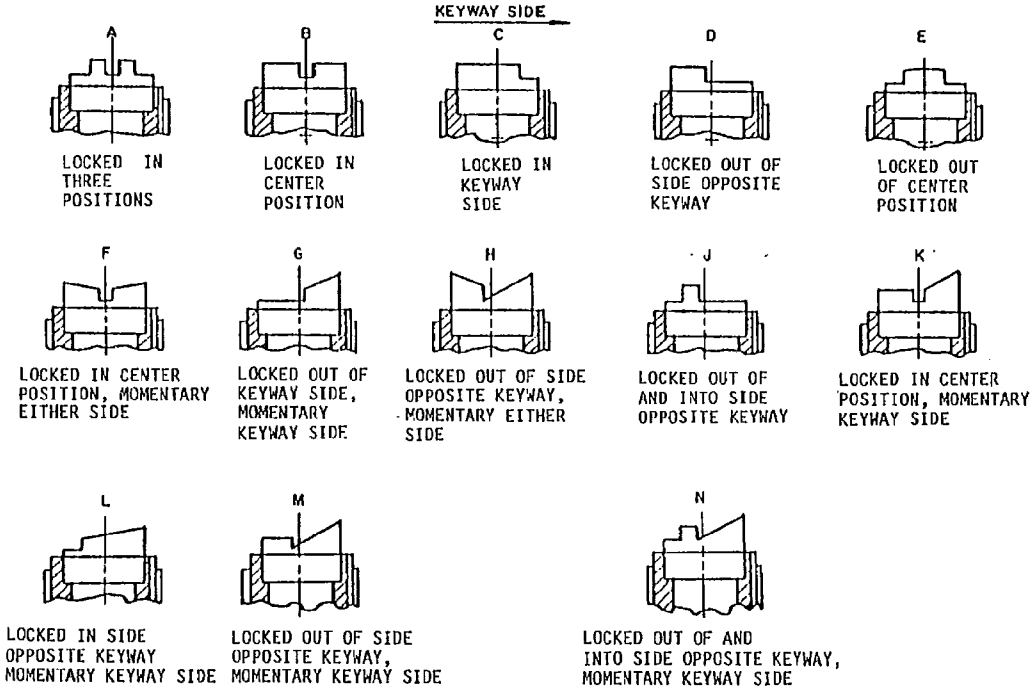

FIGURES A thru N. Illustrate the locking and momentary configurations and not the detail construction of the locking design.

(K) Denotes change

APPROVED 18 AUG 60 REVISED (K) 30 SEP 86

User activities: Army - Navy - Air Force -

Review activities: Army - ER, AR, MI Navy - AS, EC Air Force - 11, 17, 99

This military standard is approved for use by all Departments and Agencies of the Department of Defense. Selection for all new engineering and design applications and for repetitive use shall be made from this document when applicable.

P.A AF-85 Other Cust ARMY-ER NAVY-AS	International Interest ASCCAS 12/16A	TITLE SWITCH, TOGGLE, POSITIVE BREAK, LEVER LOCK, ENVIRONMENTALLY SEALED, SCREW TERMINAL, FOUR POLE, .469 MOUNTING BUSHING, 25 AMPERES	MILITARY STANDARD MS24614
Procurement Specification MIL-S-8834		SUPERSEDES: MS0024614(USAF)	PAGE 1 OF 4

DD FORM 1 MAY 73 672 (Coordinated) PREVIOUS EDITIONS OF THIS FORM ARE OBSOLETE. 5930-1331-06

AMSC N/A

Distribution Statement A. Approved for public release; distribution is unlimited.

DETAIL REQUIREMENTS:

MS DASH NO. / ENVIRONMENTAL SEALED	LOCKING COMB.	CIRCUIT MADE BETWEEN TERMINALS AS INDICATED WITH THE TOGGLE LEVER IN THESE POSITIONS: OPPOSITE KEYWAY SIDE	CENTER POSITIONS	KEYWAY SIDE
212	A,B,C, D,E	ON 2-3,5-6,8-9,11-12	OFF	ON 1-2,4-5,7-8,10-11
222	C,E		NONE	OFF
232				ON 1-2,4-5,7-8,10-11
242	J,B		OFF	NONE
262	L		NONE	MOM-ON 1-2,4-5,7-8,10-11
272	F,H	MOM-ON 2-3,5-6,8-9,11-12	OFF	
282	K	NONE		
292	L	ON 2-3,5-6,8-9,11-12	NONE	MOM-OFF
302		OFF		MOM-ON 1-2,4-5,7-8,10-11
312	G,K,M N	ON 2-3,5-6,8-9,11-12	OFF	

APPROVED 18 AUG 60 REVISED (K) FOR CHANGES SEE PAGES 1 & 3

User activities: Army - Navy - Air Force -
Review activities: Army - ER,AR,MI Navy - AS, EC Air Force - 11,17,99

This military standard is approved for use by all Departments and Agencies of the Department of Defense. Selection for all new engineering and design applications and for repetitive use shall be made from this document when applicable.

FED. SUP CLASS
5930

MS DASH NO. ENVIRON-MENTAL SEALED	CURRENT CAPACITY AMPERES PER POLE 28 VOLTS DC			CURRENT CAPACITY AMPERES PER POLE 115 VOLTS 400 HERTZ			CURRENT CAPACITY AMPERES PER POLE 115 VOLTS 60 HERTZ		
	LAMP LOAD CIRCUIT	RESIS-TIVE CIRCUIT	INDUC-TIVE CIRCUIT	LAMP LOAD CIRCUIT	RESIS-TIVE CIRCUIT	INDUC-TIVE CIRCUIT	LAMP LOAD CIRCUIT	RESIS-TIVE CIRCUIT	INDUC-TIVE CIRCUIT
212									
222									
232									
242									
262	7	25	15	7	25	15	7	20	15
272									
282									
292									
302									
312									

(K)

MS DASH NO. ENVIRON-MENTAL SEALED	CURRENT CAPACITY 1/ AMPERES PER POLE 250 VOLTS 60 HERTZ AC			CURRENT CAPACITY 1/ AMPERES PER POLE 125 VOLTS DC			CURRENT CAPACITY 1/ AMPERES PER POLE 250 VOLTS DC			LIFE LOW CURRENT LEVEL SWITCHING 30 mV
	LAMP LOAD CIRCUIT	RESIS-TIVE CIRCUIT	INDUC-TIVE CIRCUIT	LAMP LOAD CIRCUIT	RESIS-TIVE CIRCUIT	INDUC-TIVE CIRCUIT	LAMP LOAD CIRCUIT	RESIS-TIVE CIRCUIT	INDUC-TIVE CIRCUIT	
212										
222										
232										
242										
262		10	7		750 mA	-		500 mA	-	10 mA
272										
282										
292										
302										
312										

1/ Application information ratings at room temperature.

APPROVED 18 Aug 60 REVISED (K) For changes see pages 2 & 3

User activities: Army Navy Air Force

Reviewer activities: Army ER,AR,MI Navy AS,EC Air Force 11,17,99

This military standard is approved for use by all Departments and Agencies of the Department of Defense. Selection for all new engineering and design applications and for repetitive use shall be made from this document when applicable.

P.A. AirForce-85 Other Cust Army-ER Navy-AS	International Interest ASCCAS 12/16A	TITLE SWITCH, TOGGLE, POSITIVE BREAK, LEVER LOCK, ENVIRONMENTALLY SEALED, SCREW TERMINAL, FOUR POLE, .469 MOUNTING BUSHING 25 AMPERES	MILITARY STANDARD MS 24614
Procurement Specification MIL-S-8834		SUPERSEDES: MS0024614(USAF)	PAGE 3 OF 4

DD FORM 1 SEP 63 672 (Coordinated) PREVIOUS EDITIONS OF THIS FORM ARE OBSOLETE.

FED. SUP CLASS
5930

MS DASH NO.	SUPERSEDED DASH NO. SEALED		
ENVIRON-MENTAL SEALED	TOGGLE	ENVIRON-MENTAL	TOGGLE
-212	-21	-21S	-211
-222	-22	-22S	-221
232	-23	-23S	-231
242	-24	-24S	-241
-262	-26	-26S	-261
272	-27	-27S	-271
-282	-28	-28S	-281
-292	-29	-29S	-291
302	-30	-30S	-301
-312	-31	-31S	-311

MAXIMUM VIBRATION DETAIL

ACCELERATION G UNITS	FREQUENCY Hz
20 G'S	85-200
10 G'S	200-500

Example of part numbers:
MS24614B212 = ON-OFF-ON, Environmentally Sealed, Locked in Center off position.
MS24614F272 = MOM-ON, OFF, MOM-ON, Environmentally Sealed, Locked in Center off position.

INCHES	mm	INCHES	mm
.005	0.13	.432	10.97
.012	0.30	.469	11.91
.047	1.19	.480	12.19
.072	1.83	.921	23.39
.138	3.51	1.328	33.73
.250	6.35	1.336	33.93
.430	10.92	1.686	42.82

NOTES:
1. Dimensions are in inches.
2. Metric equivalents are given for general information only.
3. Unless otherwise specified, tolerances are ±.010 (0.25 mm) on decimals and ±.5° on angles.
4. For hardware and terminal screw detail specifications see appendix of MIL-S-8834.
5. For design feature purposes, this standard takes precedence over acquisition documents referenced herein.
6. Referenced Government documents of the issue listed in that issue of the Department of Defense Index of Specifications and Standards (DoDISS) specified in the solicitation form a part of this standard to the extent specified herein.
7. The superseded dash numbers are inactive for design after 20 Jul 1962.
8. The MS dash numbers supersede and are completely interchangeable with the superseded dash numbers.
9. Unlocking force = 4 ±1 pound.
10. Maximum weight: .2231 pound (101.2 grams).
11. Altitude requirements 80,000 feet.
12. 115 V ac 60 hertz electrical endurance tests are to be performed at room temperature and pressure.

APPROVED 18 Aug 60 REVISED (K) For changes see pages 2, 1 & 3

P.A. Air Force-85 Other Cust. Army-ER Navy-AS	International Interest ASCCAS 12/16A	TITLE SWITCH, TOGGLE, POSITIVE BREAK, LEVER LOCK, ENVIRONMENTALLY SEALED, SCREW TERMINAL, FOUR POLE, .469 MOUNTING BUSHING 25 AMPERES	MILITARY STANDARD MS24614
Procurement Specification MIL-S-8834		SUPERSEDES: MS0024614(USAF)	PAGE SHEET 4 OF 4

DD FORM 1 SEP 63 672 (Coordinated) PREVIOUS EDITIONS OF THIS FORM ARE OBSOLETE.

this military standard is approved for use by all Departments and Agencies of the Department of Defense. Selection for all new engineering and design applications and for repetitive use shall be made from this document when applicable.
Reviewer activities: Army ER, AR, MI Navy AS, EC Air Force 11, 17, 99
User activities: Army Navy Air Force