FED. SUP CLASS
5930

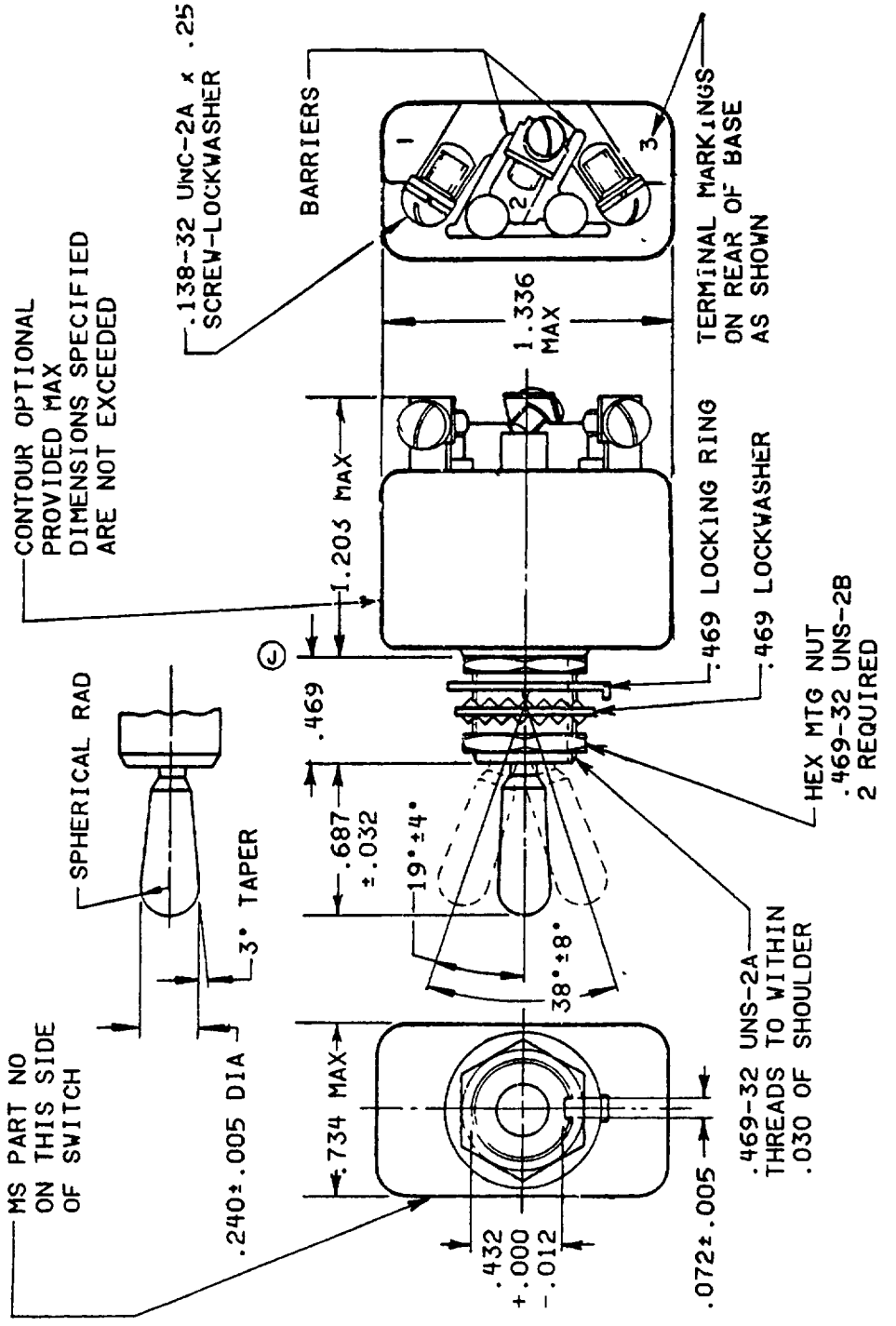

(J) Denotes change

P A Air Force-85 Other Cust Army-ER Navy-AS	International Interest ASCCAS 12/16A	TITLE SWITCH, TOGGLE, POSITIVE BREAK, ENVIRONMENTALLY SEALED, SCREW TERMINAL, SINGLE POLE, .469 MOUNTING BUSHING, 25 AMPERES	MILITARY STANDARD MS 25306
Procurement Specification MIL-S-8834		SUPERSEDES MS0025306(USAF)	PAGE 1 OF 3

DD FORM 1 MAY 73 672 (Coordinated) PREVIOUS EDITIONS OF THIS FORM ARE OBSOLETE 5930-1331-07

AMSC N/A

DISTRIBUTION STATEMENT A: Approved for public release; distribution is unlimited.

APPROVED 28 Aug 58 REVISED (D) 11 Jul 72 (E) 24 Jul 1973 (F) 23 Aug 76 (G) 20 Mar 81 (H) 18 Oct 85 (J) 30 SEP 86

This military standard is approved for use by all Departments and Agencies of the Department of Defense. Selection for all new engineering and design applications and for repetitive use shall be made from this document when applicable

Review activities: Army - AR, MI; Navy - EC; Air Force - 11,17,99

User activities: Army - ; Navy - ; Air Force -

DETAIL REQUIREMENTS.

MS DASH NO. ENVIRONMENTAL SEALED	CIRCUIT MADE BETWEEN TERMINALS AS INDICATED WITH THE TOGGLE LEVER IN THESE POSITIONS.			CURRENT CAPACITY AMPERES PER POLE 28 VOLTS DC			CURRENT CAPACITY AMPERES PER POLE 115 VOLTS 400 HERTZ			CURRENT CAPACITY AMPERES PER POLE 115 VOLTS 60 HERTZ		
	OPPOSITE KEYWAY SIDE	CENTER POSITION	KEYWAY SIDE	LAMP LOAD CIRCUIT	RESISTIVE CIRCUIT	INDUCTIVE CIRCUIT	LAMP LOAD CIRCUIT	RESISTIVE CIRCUIT	INDUCTIVE CIRCUIT	LAMP LOAD CIRCUIT	RESISTIVE CIRCUIT	INDUCTIVE CIRCUIT
-212	ON 2-3	OFF	ON 1-2	7	25	15	7	25	15	7	20	15
-222		NONE	OFF									
-232			ON 1-2									
-242		OFF	NONE									
-262		NONE										
-272	MOM-ON 2-3	OFF	MOM-ON 1-2									
-282	NONE											
-292	ON 2-3	NONE	MOM-OFF									
-302	OFF		MOM-ON 1-2									
-312	ON 2-3	OFF										

MS DASH NO. ENVIRONMENTAL SEALED	CURRENT CAPACITY 1/ AMPERES PER POLE 250 VOLTS 60 HERTZ AC			CURRENT CAPACITY 1/ AMPERES PER POLE 125 VOLTS DC			CURRENT CAPACITY 1/ AMPERES PER POLE 250 VOLTS DC			LIFE LOW CURRENT LEVEL SWITCHING 30 mV	SUPERSEDED DASH NUMBER
	LAMP LOAD CIRCUIT	RESISTIVE CIRCUIT	INDUCTIVE CIRCUIT	LAMP LOAD CIRCUIT	RESISTIVE CIRCUIT	INDUCTIVE CIRCUIT	LAMP LOAD CIRCUIT	RESISTIVE CIRCUIT	INDUCTIVE CIRCUIT		TOGGLE SEALED
-212											-211
-222											-221
-232											-231
-242											-241
-262											-261
-272		10	7		750 mA	-		500 mA	-	10 mA	-271
-282											-281
-292											-291
-302											-301
-312											-311

1/ Application information ratings at room temperature

(J) For changes see pages 1 & 2

REVISED (J)

APPROVED 28 Aug 58

User activities Army - Navy - Air Force -

Review activities Army - AR, MI Navy - EC Air Force - 11, 17, 99

This military standard is approved for use by all Departments and Agencies of the Department of Defense. Selection for all new engineering and design applications and for repetitive use shall be made from this document when applicable

P A	International interest	TITLE	MILITARY STANDARD
Air Force-85 Other Cust Army-ER Navy-AS	ASCCAS 12/16A	SWITCH, TOGGLE, POSITIVE BREAK, ENVIRONMENTALLY SEALED, SCREW TERMINAL, SINGLE POLE, 469 MOUNTING BUSHING, 25 AMPERES	MS 25306
Procurement Specification MIL-S-8834		SUPERSEDES MS0025306(USAF)	PAGE 2 OF 3

INCHES	mm	INCHES	mm
.005	0.13	.25	6.35
.012	0 30	.432	10 67
.030	0 76	.469	11.91
032	0.81	.687	17 45
.072	1 83	734	18.64
138	3 51	1.203	30 56
240	6 10	1.336	33 93

NOTES

1. Dimensions are in inches
2. Metric equivalents are given for general information only
3. Unless otherwise specified, tolerances are ± 010 (0 25 mm) on decimals and ± 5^0 on angles
4. For hardware and terminal screw detail specifications see appendix of MIL-S-8834
5. For design feature purposes, this standard takes precedence over acquisition documents referenced herein.
6. Referenced Government documents of the issue listed in that issue of the Department of Defense Index of Specifications and Standards (DoDISS) specified in the solicitation form a part of this standard to the extent specified herein
7. The MS dash numbers supersede and are completely interchangeable with the superseded dash numbers
8. Example of part numbers
   MS25306-212 = ON-OFF-ON, environmentally sealed switch
   MS25306-272 = MOM-ON, OFF, MOM-ON environmentally sealed switch.
9. Maximum weight. 0953 pound (43 2 grams).
10. Altitude requirements· 80,000 feet
11. 115 V ac, 60 hertz electrical endurance tests are to be performed at room temperature and pressure

APPROVED 28 Aug 58 REVISED (J) For changes see pages 1 & 2

This military standard is approved for use by all Departments and Agencies of the Department of Defense Selection for all new engineering and design applications and for repetitive use shall be made from this document when applicable

User activities Army - Navy - Air Force -

Review activities Army - AR, MI Navy - EC Air Force - 11, 17, 99

P A Air Force-85 Other Cust Army-ER Navy-AS	International interest ASCCAS 12/16A	TITLE SWITCH, TOGGLE, POSITIVE BREAK, ENVIRONMENTALLY SEALED, SCREW TERMINAL, SINGLE POLE, 469 MOUNTING BUSHING, 25 AMPERES	MILITARY STANDARD MS 25306
Procurement Specification MIL-S-8834		SUPERSEDES MS0025306(USAF)	PAGE 3 OF 3