INCH POUND

MIL-DTL-9395/27F
30 May 2001

SUPERSEDING
MIL-S-9395/27E
26 February 1979

DETAIL SPECIFICATION SHEET

SWITCHES, PRESSURE, GAUGE (TYPE II), 3 AMPERES

This specification is approved for use by all Departments and Agencies of the Department of Defense.

The complete requirements for procuring the pressure switch described herein shall consist of this document and the latest issue of Specification MIL-DTL-9395.

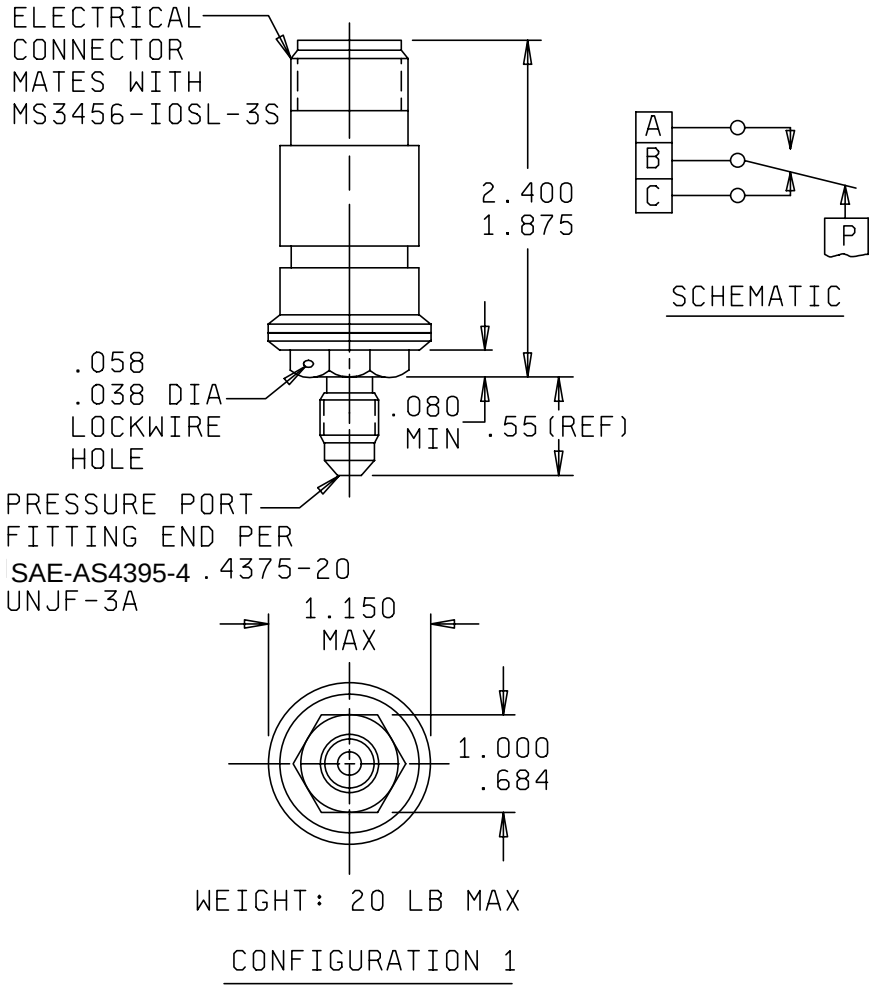

FIGURE 1. Dimensions and configurations.

DISTRIBUTION STATEMENT A. Approved for public release; distribution is unlimited.

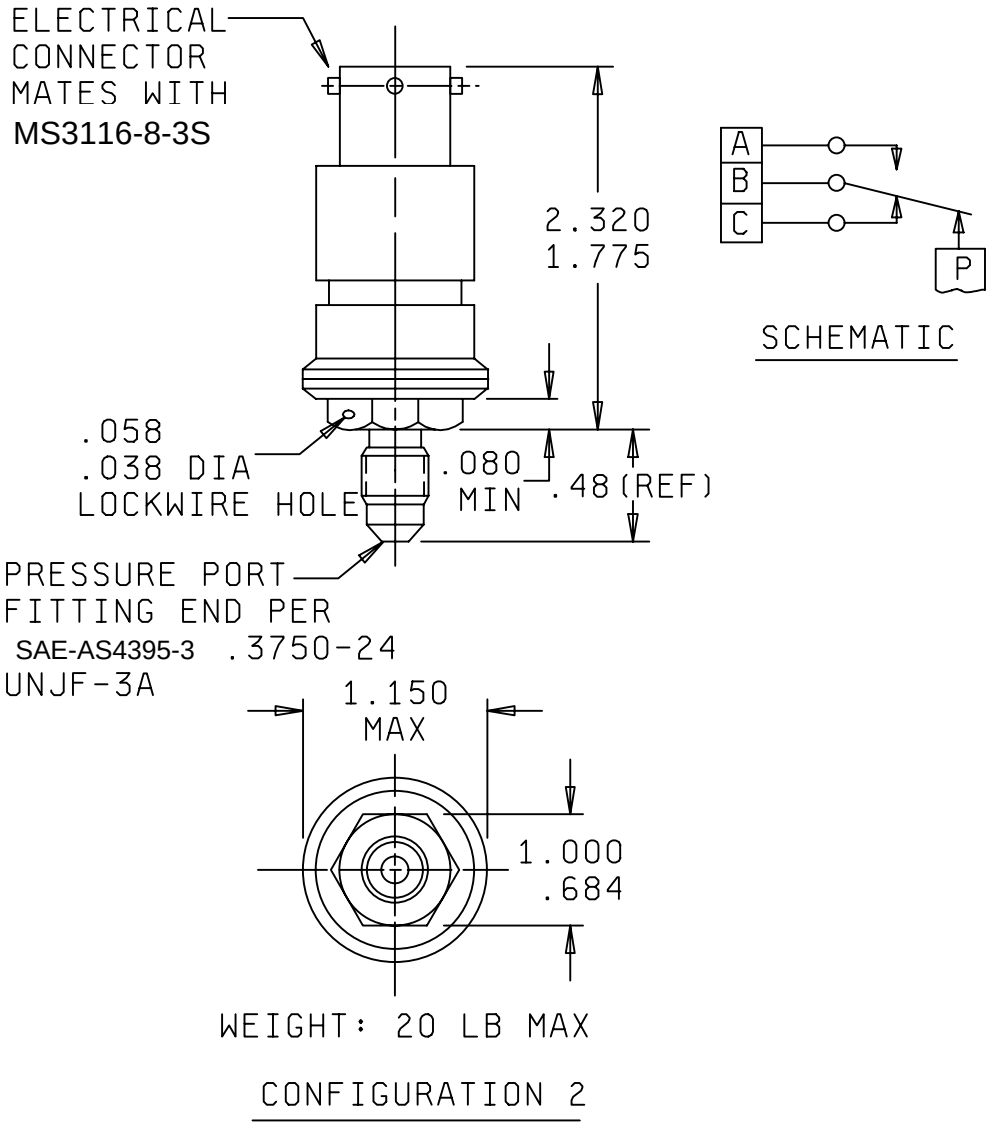

FIGURE 1. Dimensions and configurations - Continued.

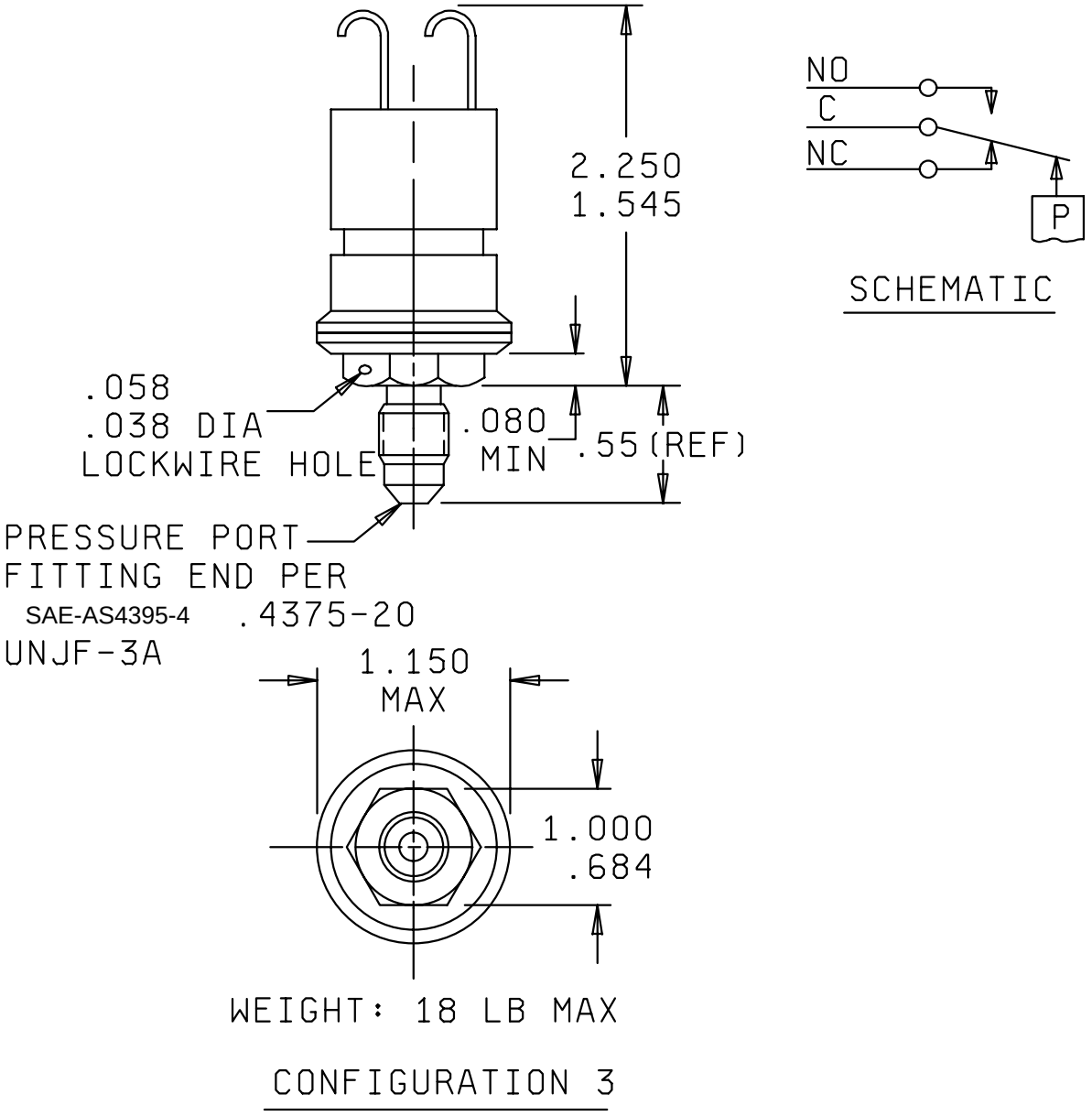

FIGURE 1. Dimensions and configurations - Continued.

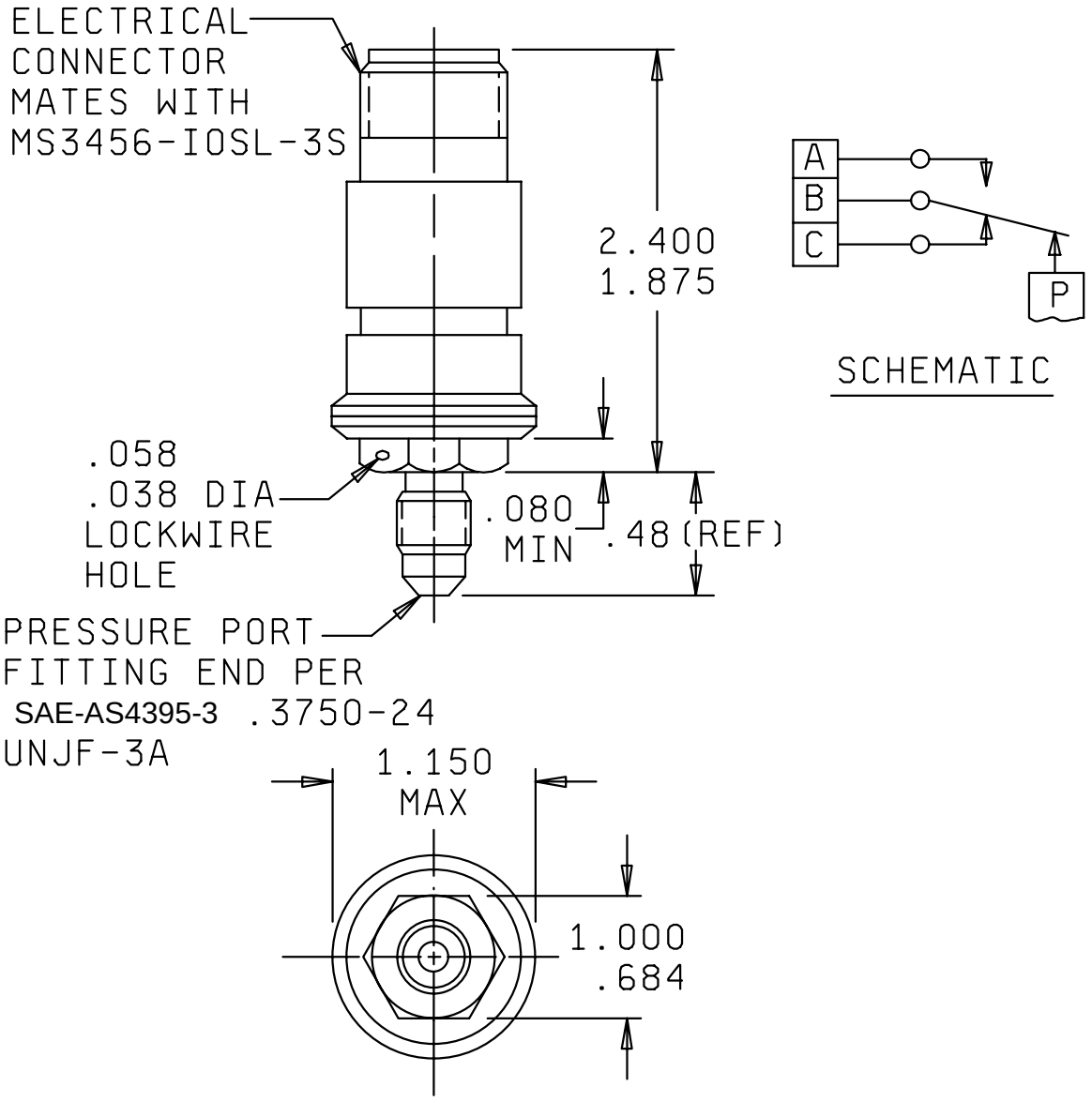

Configuration 4

FIGURE 1. Dimensions and configurations - Continued.

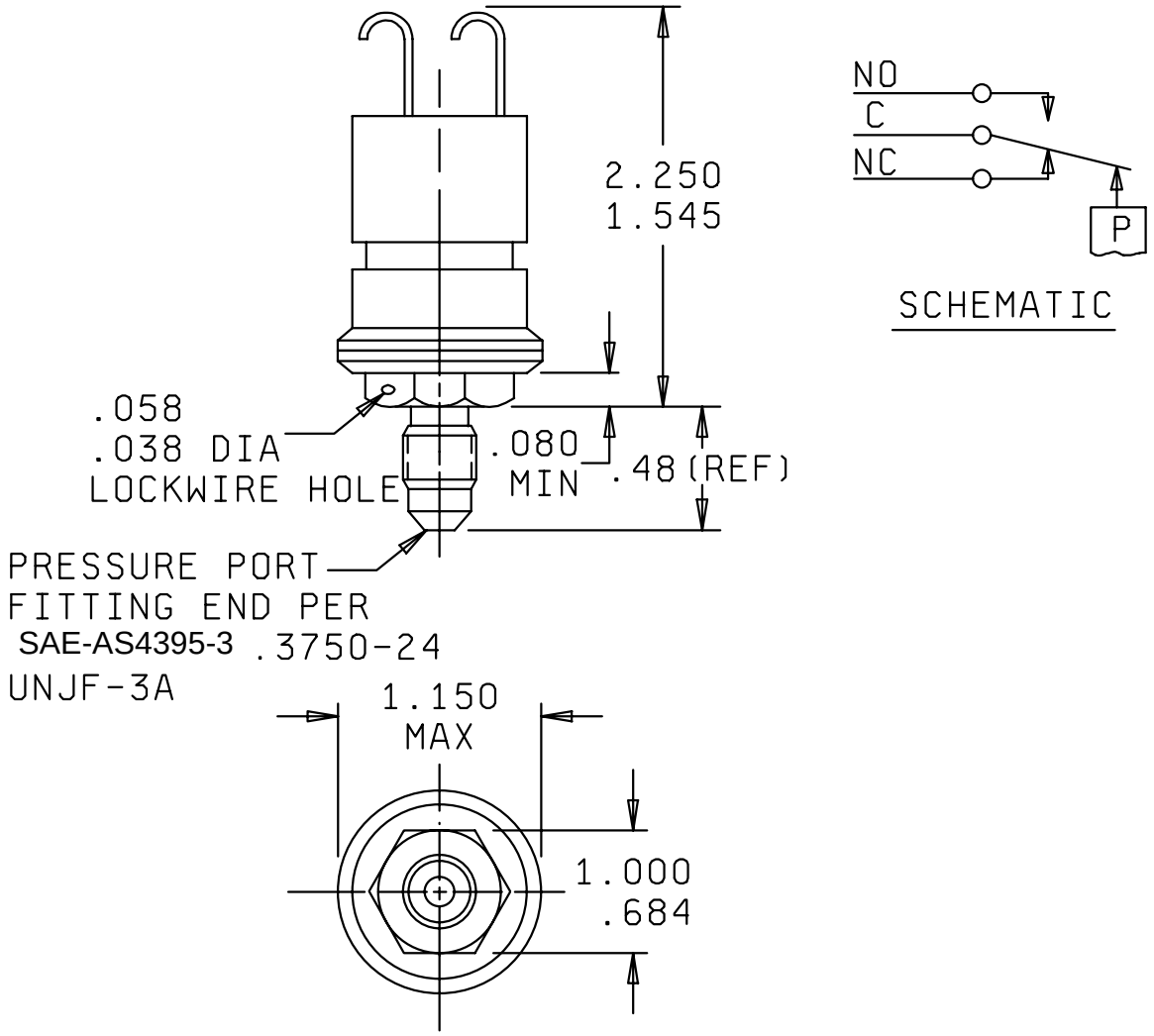

Configuration 5

FIGURE 1. Dimensions and configurations - Continued.

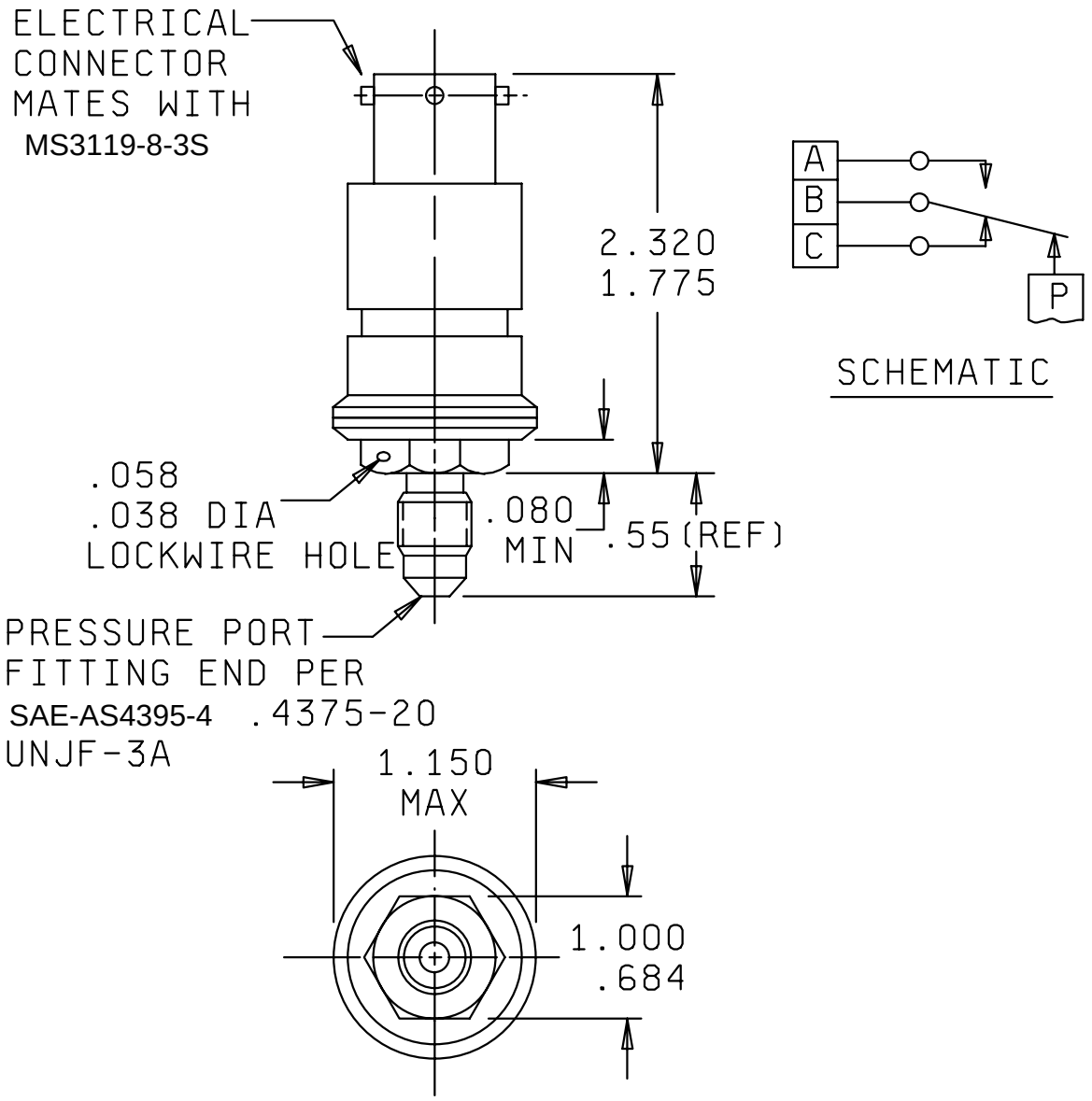

WEIGHT: .20 LB MAX

Configuration 6

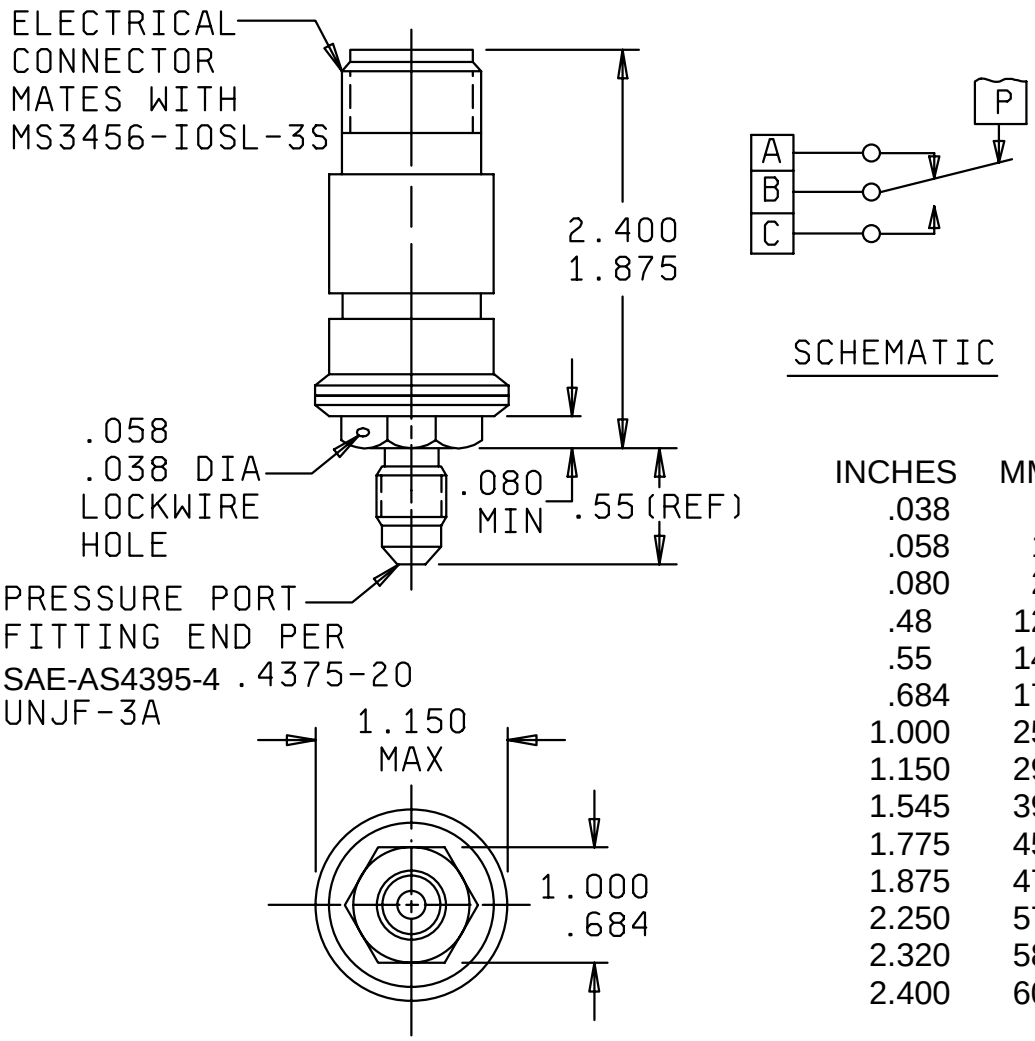

INCHES	MM
.038	.97
.058	1.47
.080	2.03
.48	12.2
.55	14.0
.684	17.37
1.000	25.40
1.150	29.21
1.545	39.24
1.775	45.08
1.875	47.62
2.250	57.15
2.320	58.93
2.400	60.96

WEIGHT: .20 LB MAX

Configuration 7

NOTES:
1. Dimensions are in inches.
2. Metric equivalents are given for general information only and are based upon 1 inch = 25.4 mm.
3. Exact shape of switching is optional provided outline dimensions specified are not exceeded and mounting holes and connector locations are as specified.
4. Schematics shown are for switches with pressure ports exposed to zero lb_f/in^2.

FIGURE 1. Dimensions and configurations - Continued.

REQUIREMENTS:

Dimensions, configuration, and electrical schematic: See figure 1.

Weight: See figure 1.

Calibration: See tables I, II, III, and IV.
Tolerance and maximum differential: See table I.

Proof pressure: 120 lb_f/in^2

System pressure: 60 lb_f/in^2

Burst pressure: 800 lb_f/in^2

Electrical ratings:
Operating voltage - 28 Vdc.
Current rating - 3 amperes resistive.
1 ampere inductive.

Seal:
Electrical chamber: See table II.
Pressure chamber: Hermetic.
Reference chamber: Unsealed.

Electrical connector: See figure 1.

Pressure port: See figure 1.

Media: Dry air, nitrogen, fuel MIL-DTL-5624, or lube oil MIL-PRF-7808, or hydraulic fluid MIL-H-5606.

High temperature (operating and nonoperating): B (275°F).

Low temperature (operating and nonoperating): D (-65°F).

Altitude: C (except 80,000 ft).

Shock: C (100 G).

Vibration: S (test condition C, method 204 of MIL-STD-202, except 10 - 2,000 Hz. 10 G).

Life mechanical: A (100,000 cycles).

Life electrical: C (50,000 cycles).

Acceleration: C (8 G).

Pulsation amplitude: A (0%).

Pulsation frequency: A (0 Hz).

Pressure surge: A (less than 100 lb_f/in^2).

Dielectric withstanding voltage (at reduced barometric pressure): Applicable at 250 Vrms.

Connector torque: Applicable.

Terminal strength: Applicable.

Part number: Part numbers shall be assigned as illustrated below:

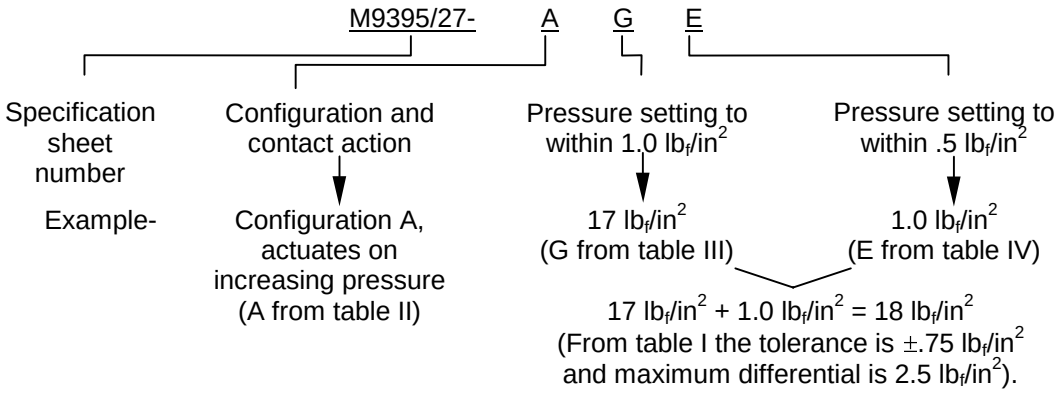

Part number M9395/27-AGE identifies a pressure switch of configuration A which actuates on increasing pressure at 18.0 ±.75 lb_f/in^2 with a maximum differential of 2.5 lb_f/in^2.

TABLE I. Tolerances and maximum differential values for each pressure setting.

Pressure lb_f/in^2	Tolerance lb_f/in^2 ±	Maximum differential lb_f/in^2
1.0 - 10.5	.5	2.0
11.0 - 20.0	.75	2.5
20.5 - 29.5	1.0	3.0
30.0 - 30.5	1.0	3.1
31.0	1.5	3.2
31.5 - 32.0	1.5	3.3
32.5 - 33.0	1.5	3.4
33.5 - 34.0	1.5	3.5
34.5 - 35.0	1.5	3.6
35.5 - 36.0	1.5	3.7
36.5 - 37.0	1.5	3.8
37.5 - 38.0	1.5	3.9
38.5 - 39.0	1.5	4.0
39.5 - 40.0	1.5	4.1
40.5 - 41.0	1.5	4.2
41.5 - 42.0	1.5	4.3
42.5 - 43.0	1.5	4.4
43.5 - 44.0	1.5	4.5
44.5	1.5	4.6
45.0 – 45.5	2.0	4.7
46.0 – 46.5	2.0	4.8
47.0 – 47.5	2.0	4.9
48.0 – 48.5	2.0	5.0
49.0 - 49.5	2.0	5.1
50.0 - 50.5	2.0	5.2
51.0 – 51.5	2.0	5.3
52.0 – 52.5	2.0	5.4
53.0 - 53.5	2.0	5.5
54.0 – 54.5	2.0	5.6
55.0 - 55.5	2.0	5.7
56.0 - 56.5	2.0	5.8
57.0 – 57.5	2.0	5.9
58.0 – 58.5	2.0	6.0
59.0 – 59.5	2.0	6.1
60.0	2.0	6.2

TABLE II. Configuration and contact action.

	Configuration 1		Configuration 2		Configuration 3	
	Electrical chamber		Electrical chamber		Electrical chamber	
	Hermetic	Unsealed	Hermetic	Unsealed	Hermetic	Unsealed
Actuates on increasing pressure	A	C	E	G	J	L
Actuates on decreasing pressure	B	D	F	H	K	M

Configuration 4		Configuration 5		Configuration 6		Configuration 7	
Electrical chamber		Electrical chamber		Electrical chamber		Electrical chamber	
Hermetic	Unsealed	Hermetic	Unsealed	Hermetic	Unsealed	Hermetic	Unsealed
N	Q	S	U	W	Y	1	3
P	R	T	V	X	Z	2	4

TABLE III. Pressure setting to within 1 lb_f/in^2.

Pressure	Code	Pressure	Code	Pressure	Code
2.0	A	22.0	J	42.0	S
4.5	B	24.5	K	44.5	T
7.0	C	27.0	L	47.0	U
9.5	D	29.5	M	49.5	V
12.0	E	32.0	N	52.0	W
14.5	F	34.5	P	54.5	X
17.0	G	37.0	Q	57.0	Y
19.5	H	39.5	R	59.5	Z

TABLE IV. Pressure setting to within .5 lb_f/in^2.

Unit	Code
-1.0	A
-0.5	B
0	C
0.5	D
1.0	E

TABLE V. Extent of qualification.

Part number	No. of samples required	Tests	Qualifies
ELECTRICAL CHAMBERS EITHER HERMETICALLY SEALED OR UNSEALED			
M9395/27-BAE DAE NYB XYB	1 ea. resistive 1 ea. resistive 1 ea. inductive 1 ea. inductive	Complete per qualification Inspection of MIL-DTL-9395	All
M9395/27-BAA FAE XYB WZD	1 ea. inductive 1 ea. inductive 1 ea. resistive 1 ea. resistive	Group I and Group III	
ELECTRICAL CHAMBERS UNSEALED			
M9395/27-DAE CAA GYB YYB	1 ea. resistive 1 ea. resistive 1 ea. inductive 1 ea. inductive	Complete per qualification Inspection of MIL-DTL-9395	Configurations C, D, G, H, L M, Q, R, U, V, Y, Z, 3 and 4
M9395/27-DAE CAE YYB ZZD	1 ea. inductive 1 ea. inductive 1 ea. resistive 1 ea. resistive	Group I and Group III	

Custodians:
Army - CR
Navy - EC
Air Force - 85
DLA - CC

Review Activities:
Army - AV
Navy -AS, MC, SH
Air Force - 99

Preparing Activity:
DLA - CC

(Project 5930-1730-08)