FED. SUP CLASS
4730

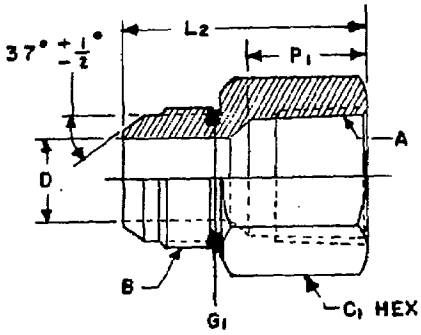

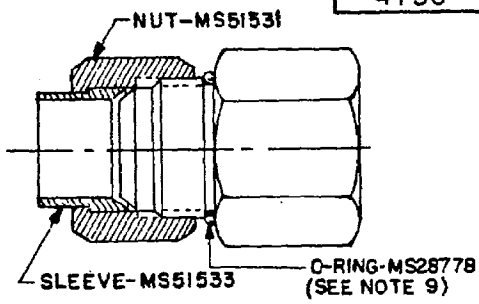

DASH NUMBER		TUBE OD	A	B	C_1	D		C_1	L_2	P_1
			PIPE THREAD NPTF	STRAIGHT THREAD	HEX FLAT	DIAMETER				
BODY	*ASSY	NOM			NOM	BASIC	TOLERANCE	+.002 -.003	±.020	MAX
B2	A2	1/8	1/8	5/16-24 UNF-2A	9/16	.062		.250	1.120	.460
B3	A3	3/16	1/8	3/8 -24 UNF-2A	9/16	.125		.313	1.130	.460
B4	A4	1/4	1/8	7/16-20 UNF-2A	9/16	.172	±.003	.364	1.190	.460
**B4-4	**A4-4	1/4	1/4	7/16-20 UNF-2A	3/4	.172		.364	1.390	.670
B5	A5	5/16	1/8	1/2 -20 UNF-2A	9/16	.234		.427	1.170	.460
**B5-4	**A5-4	5/16	1/4	1/2 -20 UNF-2A	3/4	.234		.427	1.390	.670
B6	A6	3/8	1/4	9/16-18 UNF-2A	3/4	.297		.482	1.400	.670
**B6-6	**A6-6	3/8	3/8	9/16-18 UNF-2A	7/8	.297	±.004	.482	1.460	.680
B8	A8	1/2	3/8	3/4 -16 UNF-2A	7/8	.391		.660	1.560	.680
**B8-8	**A8-8	1/2	1/2	3/4 -16 UNF-2A	1-1/8	.391		.660	1.790	.900
B10	A10	5/8	1/2	7/8 -14 UNF-2A	1-1/8	.484		.773	1.890	.900
B12	A12	3/4	3/4	1-1/16-12 UN-2A	1-3/8	.609	±.005	.945	2.060	.910
B14	A14	7/8	3/4	1-3/16-12 UN-2A	1-3/8	.718		1.070	2.060	.910
B16	A16	1	1	1-5/16-12 UN-2A	1-5/8	.844	+.007-.005	1.195	2.350	1.140
B20	A20	1-1/4	1-1/4	1-5/8 -12 UN-2A	2	1.078		1.507	2.490	1.160
B24	A24	1-1/2	1-1/2	1-7/8 -12 UN-2A	2-3/8	1.312	+.008-.005	1.756	2.620	1.160
B32	A32	2	2	2-1/2 -12 UN-2A	2-7/8	1.781	+.010-.005	2.381	2.970	1.180

** NOT RECOMMENDED FOR NEW DESIGN.

NOTES:

1. MATERIAL: Steel, carbon in accordance with procurement specification.
   Steel, corrosion-resisting in accordance with procurement specification.
2. PROTECTIVE COATING: Cadmium plated in accordance with procurement specification.
   Zinc plate in accordance with procurement specification.
   Phosphate coating in accordance with procurement specification.
   Passivation treatment in accordance with procurement specification.
3. DIMENSIONS AND TOLERANCES: Dimensions and tolerances not shown shall be in accordance with the SAE Standards for 37 Degree Flared Fittings (SAE J514).
4. THREADS: Threads shall be in accordance with Screw-Thread Standard for Federal Services, Handbook H28.
5. PART NUMBER: The MS part number consists of the MS number plus the dash number.
   A. For body only, cadmium plated, use the MS number, plus the body dash number. Example: MS51503B2.
   B. For complete assembly (with nut and sleeve), cadmium plated, use the MS number, plus the assembly dash number. Example: MS51503A2.
   C. For zinc coating add (Z) to the dash number. Example: MS51503B2Z or MS51503A2Z.
   D. For phosphate coating add (P) to the dash number. Example: MS51503B2P or MS51503A2P.
   E. For corrosion-resisting steel add (S) to the dash number. Example: MS51503B2S or MS51503A2S.
6. For design feature purposes, this standard takes precedence over procurement documents referenced herein.
7. Reference documents shall be of the issue in effect on date of invitations for bid.
8. The illustration is for identification purposes only and is not intended to restrict designs or shapes not dimensioned.
*9. Procure the O-Ring separately and install immediately before installation of the fitting.
10. Ⓐ After 17 January 1979 bodies will be used for production only and SHALL NOT be stocked for maintenance. Existing stock of bodies should be used until depleted.

REVIEWER: CS-EL-ME
USER: AT-MC-YD

This military standard is approved for use by all Departments and Agencies of the Department of Defense. Selection for all new engineering and design applications and for repetitive use shall be made from this document when applicable.

APPROVED 20 DEC 1971 REVISED Ⓐ 17 JANUARY 1979

P.A. AR Other Cust OS	TITLE ADAPTER, STRAIGHT, PIPE TO TUBE, FEMALE PIPE END, 37° FLARED	MILITARY STANDARD MS51503
PROCUREMENT SPECIFICATION MIL-F-18866	SUPERSEDES:	SHEET 1 OF 1

DD FORM 1 SEP 67 672-1 (Continuation)