FED. SUP. CLASS
4730

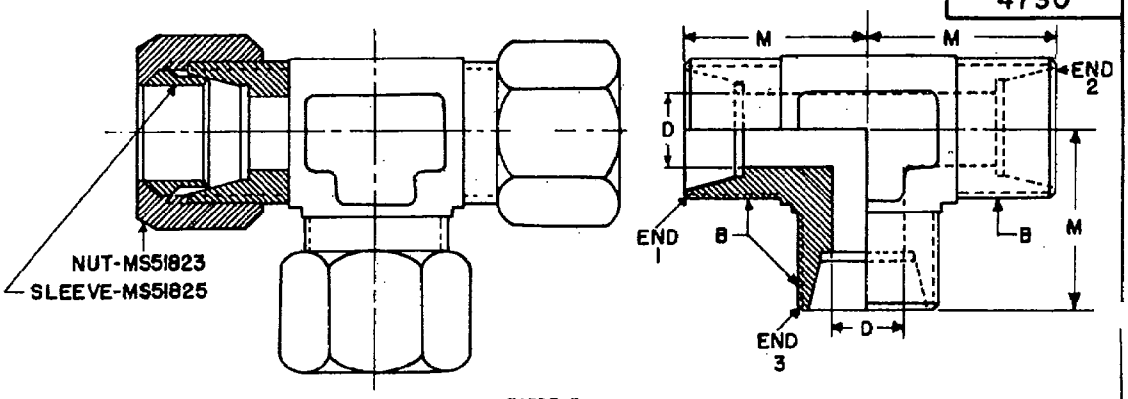

TABLE I
STANDARD SIZES - RECOMMENDED FOR NEW DESIGN AND ENGINEERING

DASH NUMBER		TUBE OD NOM	B STRAIGHT THREAD CLASS 2A	D DIA DRILL	M ±.03
ASSY	*BODY				
1	31	1/8	5/16-24UNF	0.093	0.77
2	32	3/16	3/8 -24UNF	0.125	0.83
3	33	1/4	7/16-20UNF	0.203	0.89
5	35	5/16	1/2 -20UNF	0.234	0.95
8	38	3/8	9/16-18UNF	0.281	1.05
15	45	1/2	3/4 -16UNF	0.422	1.25
17	47	5/8	7/8 -14UNF	0.500	1.42
18	48	3/4	1-1/16-12UN	0.656	1.58
19	49	7/8	1-3/16-12UN	0.718	1.62
22	52	1	1-5/16-12UN	0.875	1.73
27	57	1-1/4	1-5/8 -12UN	1.093	1.89
28	58	1-1/2	1-7/8 -12UN	1.344	2.02
29	59	2	2-1/2 -12UN	1.813	2.45

TABLE II
NONSTANDARD SIZES - NOT RECOMMENDED FOR NEW DESIGN AND ENGINEERING

DASH NUMBER		TUBE O.D. NOM ENDS			- ENDS			B STRAIGHT THREAD CLASS 2A	D DIA DRILL	M ±.03
ASSY	*BODY	(1)	(2)	(3)	(1)	(2)	(3)			
4	34	3/8	3/8	1/4	X	X	X	9/16-18UNF 7/16-20UNF	0.281 0.203	1.05 1.03
6	36	3/8	5/16	5/16	X	X	X	9/16-18UNF 1/2 -20UNF	0.281 0.234	1.05 1.03
7	37	5/16	5/16	3/8	X	X	X	1/2--20UNF 9/16-18UNF	0.234 0.281	1.03 1.05
9	39	1/2	3/8	3/8	X	X	X	3/4 -16UNF 9/16-18UNF	0.422 0.281	1.25 1.14
10	40	1/2	1/2	3/8	X	X	X	3/4 -16UNF 9/16-18UNF	0.422 0.281	1.25 1.14
11	41	5/8	3/8	3/8	X	X	X	7/8 -14UNF 9/16-18UNF	0.500 0.281	1.42 1.24
12	42	1-1/4	1-1/4	3/8	X	X	X	1-5/8 -12UN 9/16-18UNF	1.093 0.281	1.89 1.63
13	43	3/8	3/8	1/2	X	X	X	9/16-18UNF 3/4 -16UNF	0.281 0.422	1.14 1.25
14	44	1/2	3/8	1/2	X	X	X	3/4 -16UNF 9/16-18UNF	0.422 0.281	1.25 1.14
16	46	1	1	1/2	X	X	X	1-5/16-12UN 3/4 -16UNF	0.875 0.422	1.73 1.58
20	50	1-1/2	7/8	7/8	X	X	X	1-7/8 -12UN 1-3/16-12UN	1.344 0.718	2.02 2.02
21	51	1-1/2	1-1/2	7/8	X	X	X	1-7/8 -12UN 1-3/16-12UN	1.344 0.718	2.02 2.02
23	53	1-1/4	1	1	X	X	X	1-5/8 -12UN 1-5/16-12UN	1.093 0.875	1.89 1.89
24	54	1	1	1-1/4	X	X	X	1-5/16-12UN 1-5/8 -12UN	0.875 1.093	1.89 1.89
25	55	1	1-1/4	1-1/4	X	X	X	1-5/16-12UN 1-5/8 -12UN	0.875 1.093	1.89 1.89
26	56	1-1/4	5/8	1-1/4	X	X	X	1-5/8 -12UN 7/8 -14UNF	1.093 0.500	1.89 1.81

FOR NOTES SEE SHEET 2.

(E) Denotes change

P.A. AR Other Cust 99	TITLE TEE, TUBE, FLARELESS TYPE, HYDRAULIC	MILITARY STANDARD MS51811
PROCUREMENT SPECIFICATION MIL-F-18866	SUPERSEDES CNHX11 in part, 11.1 in part, 20 in part, 20.1 and 20.2	SHEET 1 OF 2

DD FORM 1 SEP 67 672-1 (Coordinated)

APPROVED 29 DEC 1967 REVISED (A) 30 DEC 1970 (B) 22 NOV 1974 (C) 13 May 77 (D) 17 June 1982 (E) 30 July 1987

User Activities:
Army - AV
Navy - OS, MC

Review Activities:
Army - AT, GL, ME
Air Force - 82
DLA - CS

DISTRIBUTION STATEMENT A. Approved for public release; distribution is unlimited.
This military standard is approved for use by all Departments and Agencies of the Department of Defense. Selection for all new engineering and design applications and for repetitive use shall be made from this document, when applicable.

NOTES:

1. MATERIAL: Steel, carbon in accordance with procurement specification.
Steel, corrosion-resisting in accordance with procurement specification.

2. PROTECTIVE COATING: Cadmium plated in accordance with procurement specification.
Zinc plated in accordance with procurement specification.
Phosphate coating in accordance with procurement specification.
Passivation treatment in accordance with procurement specification.

3. DIMENSIONS AND TOLERANCES: Dimensions and tolerances not shown shall be in accordance with the SAE Standards for Flareless Tube Fittings (SAE J514).

4. THREADS: Threads shall be in accordance with Screw-Thread Standards for Federal Services, FED-STD-H28.

(E) 5. PART NUMBER: The MS part number consists of the MS number, plus the dash number and (for complete assembly) the applicable MS51825 sleeve style designator.

A. For complete assembly (with nuts and sleeves), cadmium plated, use the MS number, plus the assembly dash number and the sleeve style designator. Example: MS51811-1A or MS51811-1B.

B. For the body only, cadmium plated, use the MS number and the body dash number. Example: MS51811-31.

C. For zinc coating add "Z" and (for complete assembly) the sleeve style designator to the dash number. Example: MS51811-1ZA or MS51811-1ZB or MS51811-31Z.

D. For phosphate coating add "P" and (for complete assembly) the sleeve style designator to the dash number. Example: MS51811-1PA or MS51811-1PB or MS51811-31P.

E. For corrosion-resisting steel add "SS" and (for complete assembly) the sleeve style designator to the dash number. Example: MS51811-1SSA or MS51811-1SSB or MS51811-31SS.

6. For design feature purposes, this standard takes precedence over procurement documents referenced herein.

7. Reference documents shall be of the issue in effect on date of invitations for bid.

8. The illustration is for identification and is not intended to restrict designs or shapes not dimensioned.

* 9. After 22 NOV 1974 , bodies will be used for production only and SHALL NOT be stocked for maintenance. Existing stock of bodies should be used until depleted.

10. CAUTION: The following data is furnished for the purpose of new design only and is not intended to imply interchangeability.

MS51811 will replace MS 39198 for new design after approval date on this document. Table III below gives reference data for coordination of equivalent tube sizes, in both compression and hydraulic type tees. Assembly replacement is authorized.

TABLE III (FOR INFORMATION ONLY)
ASSEMBLY EQUIVALENCY

(E)

PART NUMBER		PART NUMBER		PART NUMBER	
COMPRESSION	HYDRAULIC	COMPRESSION	HYDRAULIC	COMPRESSION	HYDRAULIC
MS39198-1	MS51811-1	MS39198-11	MS51811-10	MS39198-20	MS51811-19
-2	-2	-12	-11	-21	-20
-3	-3	-13	-12	-22	-21
-4	-4	-14	-13	-23	-22
-5	-5	-15	-14	-24	-23
-6	-6	-16	-15	-25	-24
-7	-7	-17	-16	-26	-25
-8	-8	-18	-17	-27	-26
-9	NONE	-19	-18	-28	-27
-10	-9			-29	-28

User Activities:
Army - AV
Navy - OS, MC

Review Activities:
Army - AT, CR, ME
Air Force - 82
DLA - CS

(E)

This military standard is approved for use by all Departments and Agencies of the Department of Defense. Selection for all new engineering and design applications and for repetitive use shall be made from this document, when applicable.

APPROVED 29 DEC 1967 REVISED (A) 30 DEC 1970 (B) FOR CHANGES SEE SHEET 1 (C) FOR CHANGES SEE SHEET 2. (D) 17 June 1982 (E) 30 July 1987

P.A. AR Other Cust 99	TITLE TEE, TUBE, FLARELESS TYPE, HYDRAULIC	MILITARY STANDARD MS51811
PROCUREMENT SPECIFICATION MIL-F-18866	SUPERSEDES CNHX11 in part, 11.1 in part, 20 in part, 20.1 and 20.2	SHEET 2 OF 2