FED. SUP. CLASS
4730

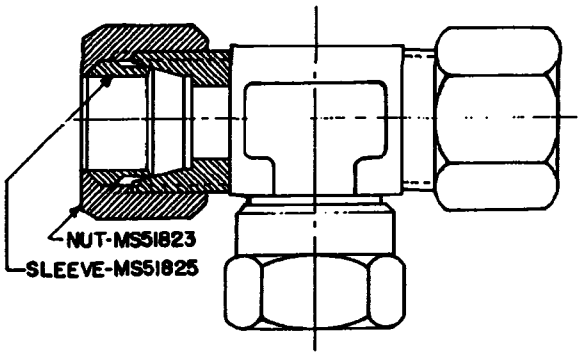

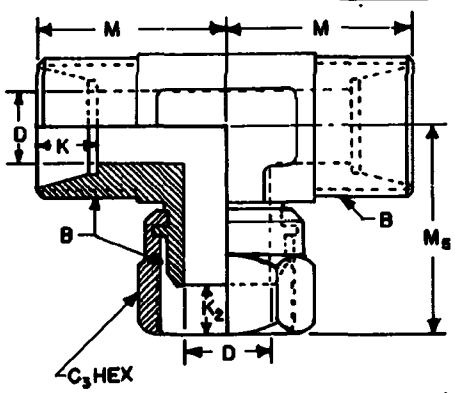

DASH NUMBER		TUBE	B	C_3 HEX	D	K	K_2	M	M_5
ASSY	*BODY	O.D. NOM	STRAIGHT THREAD CLASS 2A CR 2B	FLAT MAX	DIA DRILL	+.015 -.005	+.040 -.020	±.03	±.06
1	2	1/8	5/16-24UNF	7/16	0.093	.188	.172	0.77	0.98
3	4	3/16	3/8 -24UNF	1/2	0.125	.234	.178	0.83	1.02
5	6	1/4	7/16-20UNF	9/16	0.203	.234	.219	0.89	1.05
7	8	5/16	1/2 -20UNF	5/8	0.234	.250	.219	0.95	1.14
9	10	3/8	9/16-18UNF	11/16	0.281	.250	.265	1.05	1.28
11	12	1/2	3/4 -16UNF	7/8	0.422	.305	.250	1.25	1.47
13	14	5/8	7/8 -14UNF	1	0.500	.350	.304	1.42	1.61
15	16	3/4	1-1/16-12UN	1-1/4	0.656	.350	.354	1.58	1.77
17	18	7/8	1-3/16-12UN	1-3/8	0.718	.350	.281	1.62	1.80
19	20	1	1-5/16-12UN	1-1/2	0.875	.415	.250	1.73	1.86
21	22	1-1/4	1-5/8 -12UN	2	1.093	.415	.265	1.89	2.08
23	24	1-1/2	1-7/8 -12UN	2-1/4	1.344	.485	.289	2.02	2.20
25	26	2	2-1/2 -12UN	2-7/8	1.813	.485	.281	2.45	2.52

NOTES:
1. MATERIAL: Steel, carbon in accordance with procurement specification.
   Steel, corrosion-resisting in accordance with procurement specification.
2. PROTECTIVE COATING: Cadmium plated in accordance with procurement specification.
   Zinc plated in accordance with procurement specification.
   Phosphate coating in accordance with procurement specification.
   Passivation treatment in accordance with procurement specification.
3. DIMENSIONS AND TOLERANCES: Dimensions and tolerances not shown shall be in accordance with SAE Standard for Flareless Tube Fittings (SAE J514).
4. © THREADS: Threads shall be in accordance with Screw-Thread Standard for Federal Services, FED-STD-H28.
5. © PART NUMBER: The MS part number consists of the MS number, plus the dash number and (for complete assembly) the applicable MS51825 sleeve style designator.
   A. For complete assembly (with nuts and sleeves), cadmium plated, use the MS number, plus the assembly dash number and the sleeve style designator. Example: MS51853-1A or MS51853-1B.
   B. For body only, cadmium plated, use the MS number and the body dash number. Example: MS51853-2.
   C. For zinc coating add "Z" and (for complete assembly) the sleeve style designator to the dash number. Example: MS51853-1ZA or MS51853-1ZB or MS51853-2Z.
   D. For phosphate coating add "P" and (for complete assembly) the sleeve style designator to the dash number. Example: MS51853-1PA or MS51853-1PB or MS51853-2P.
   E. For corrosion-resisting steel add "SS" and (for complete assembly) the sleeve style designator to the dash number. Example: MS51853-1SSA or MS51853-1SSB or MS51853-2SS.
6. For design feature purposes, this standard takes precedence over procurement documents referenced herein.
7. Reference documents shall be of the issue in effect on date of invitations for bid.
8. The illustration is for identification and is not intended to restrict designs or shapes not dimensioned.
* 9. After 22 NOV 1974 , bodies will be used for production only and SHALL NOT be stocked for maintenance. Existing stock of bodies should be used until depleted.

© Denotes change

P.A. AR Other Cost 99	TITLE TEE, TUBE TO SWIVEL, SWIVEL ON BRANCH, FLARELESS TYPE, HYDRAULIC	MILITARY STANDARD MS51853
PROCUREMENT SPECIFICATION MIL-F-18866	SUPERSEDES:	SHEET 1 OF 1

DD FORM 672-1 (Coordinated) PREVIOUS EDITIONS OF THIS FORM ARE OBSOLETE

4730-0896

© User Activities: Army - AT, AV, EL, AR; Navy - OS, MC

© Review Activities: Army - GL, ME; Air Force - 82; DLA - CS

DISTRIBUTION STATEMENT A. Approved for public release; distribution is unlimited. This military standard is approved for use by all Departments and Agencies of the Department of Defense. Selection for all new engineering and design applications and for repetitive use shall be made from this document.

APPROVED 16 DEC 1968 REVISED (A) 30 DEC 1970 (B) 22 NOV 1974 © 30 July 1987