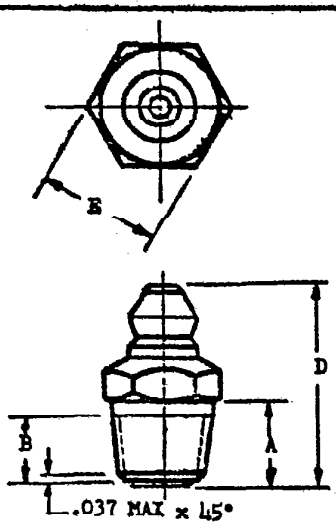

FIGURE 1

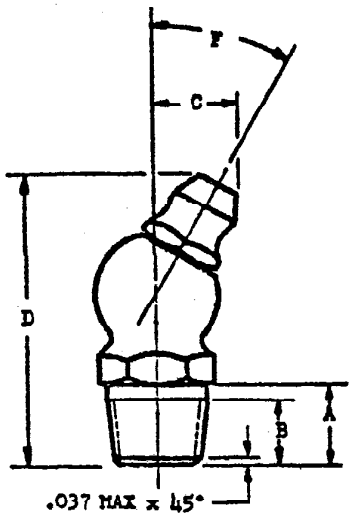

FIGURE 2

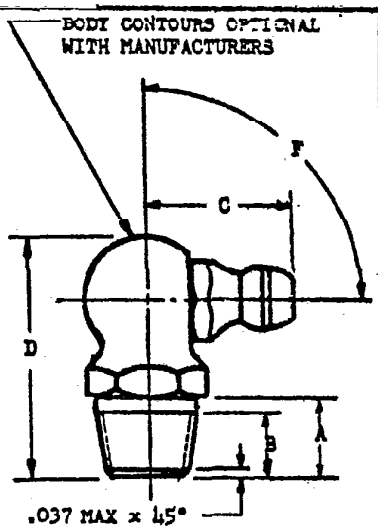

FIGURE 3

ACCEPTABLE TIP DESIGNS - IN ACCORDANCE WITH MS15000

MS PART NO.	FIG.	(a) THREAD T	A ±1/32	(b) B	C MAX	D MAX	E +.000 -.003	F	FEDERAL ITEM IDENTIFICATION NO.
MS15006-1	1	1/8	3/8	17/64	-	15/16	.438	-	172-0049
MS15006-2	2	1/8	3/8	17/64	1/2	1-3/8	.438	30°	172-0052
MS15006-3	2	1/8	3/8	17/64	9/16	1-1/8	.438	65°	172-0055
MS15006-4	3	1/8	3/8	17/64	5/8	1	.438	90°	172-0058
MS15006-5	3	1/8	3/8	17/64	5/8	1-3/16	.438	105°	172-0061

(a) PIPE THREAD SHALL BE NPT AND GAGED WITH DRYSEAL (NPTF - L1) GAGES IN ACCORDANCE WITH HANDBOOK H-28 EXCEPT THAT WIDTH OF FLAT ON THREAD CREST MAY BE .007 MAXIMUM.

(b) EFFECTIVE THREADS.

MATERIAL: STEEL - SEE PROCUREMENT SPECIFICATION.

FINISH: SEE PROCUREMENT SPECIFICATION.

DIMENSIONS IN INCHES. UNLESS OTHERWISE SPECIFIED, TOLERANCES: ANGLES ±5°.

APPROVED 12 Jul 51 REVISED

NOTICE: When Government drawings, specifications, or other data are used for any purpose other than in connection with a definitely related Government procurement operation, the United States Government thereby incurs no responsibility, nor any obligation whatsoever; and the fact that the Government may have formulated, furnished, or in any way supplied the said drawings, specifications, or other data is not to be regarded by implication or otherwise as in any manner licensing the holder or any other person or corporation, or conveying any rights or permission to manufacture, use, or sell any patented invention that may in any way be related thereto.

CUSTODIANS: Army - O
Navy - BuAer
Air Force

PROCUREMENT SPECIFICATION
MIL-F-3541

MILITARY STANDARD

FITTINGS, LUBRICATION (HYDRAULIC) LEAKPROOF, 1/8 PIPE THREADS, STEEL, TYPE VI

MS15006

SHEET 1 OF 1

OTHER INTEREST: Army - ESLGT Navy -