MIL-F-38009F
18 September 1972
SUPERSEDING
MIL-F-38009E
2 September 1970

# MILITARY SPECIFICATION

## FILTER-SEPARATOR ELEMENT KIT, LIQUID FUEL FFU-11/E

This specification is mandatory for use by all Departments and Agencies of the Department of Defense.

## 1. SCOPE

* 1.1 This specification covers one type of filter-separator element kit, designated FFU-11/E. This specification also covers the procurement of the kit's coalescer elements alone or separator elements alone.

## 2. APPLICABLE DOCUMENTS

2.1 The following documents, of the issue in effect on date of invitation for bids or request for proposal, form a part of this specification to the extent specified herein:

SPECIFICATIONS

Federal

| | |
|---|---|
| L-P-378 | Plastic Sheet and Strip, Thin Gauge, Polyolefin |
| PPP-B-566 | Box, Folding, Paperboard |
| PPP-B-601 | Box, Wood, Cleated-Plywood |
| PPP-B-621 | Box, Wood, Nailed and Lock-Corner |
| PPP-B-640 | Box, Fiberboard, Corrugated, Triple-Wall |
| PPP-B-676 | Box, Setup |

Military

| | |
|---|---|
| MIL-P-116 | Preservation, Methods of |
| MIL-G-5572 | Gasoline, Aviation, Grades 80/87, 100/130, 115/145 |
| MIL-T-5624 | Turbine Fuel, Aviation, Grades JP-4 and JP-5 |
| MIL-R-6855 | Rubber, Synthetic, Sheets, Strips, Molded or Extruded Shapes |
| MIL-F-8901 | Filter-Separators, Aviation and Motor Fuel, Ground and Shipboard Use, General Requirements and Test Procedures for |
| MIL-P-19834 | Plates, Identification, Metal Foil, Adhesive Backed |

STANDARDS

Military

| | |
|---|---|
| MIL-STD-105 | Sampling Procedures and Tables for Inspection by Attributes |
| MIL-STD-129 | Marking for Shipment and Storage |
| MIL-STD-130 | Identification Marking of US Military Property |
| MIL-STD-831 | Test Reports, Preparation of |

(Copies of specifications, standards, drawings, and publications required by suppliers in connection with specific procurement functions should be obtained from the procuring activity or as directed by the contracting officer.)

2.2 Other publications. The following documents form a part of this specification to the extent specified herein. Unless otherwise indicated, the issue in effect on date of invitation for bids or request for proposal shall apply.

American Society for Testing and Materials

| | |
|---|---|
| D256 | Standard Methods of Test for Impact Resistance of Plastics and Electrical Insulating Materials |
| D638 | Standard Method of Test for Tensile Properties of Plastics |
| D790 | Standard Methods of Test for Flexural Properties of Plastics |

(Application for copies should be addressed to the American Society for Testing and Materials, 1916 Race Street, Philadelphia, Pennsylvania 19103.)

3. REQUIREMENTS

3.1 Preproduction. This specification makes provisions for preproduction testing.

3.2 General specification. The requirements of MIL-F-8901 apply as requirements of this specification with the exceptions and additions specified herein. When the two specifications conflict, this specification shall govern.

3.3 Materials

3.3.1 Metallic parts. All metallic parts of the filter-separator element kit shall be made from an aluminum alloy suitable for the application.

3.3.2 Petroleum products. The materials used in the construction of the filter-separator element kit shall neither affect nor be affected by petroleum products.

3.3.3 Fungusproof materials. Materials that are not nutrients for fungi shall be used to the greatest extent practicable. Where materials that are nutrients for fungi must be used, such materials shall be treated with a fungicidal agent.

3.3.4 Plastic parts. If used in the construction of the elements, molded plastic parts shall have the following physical properties:

a. Tensile strength minimum - 4,500 psi

b. Flexural strength minimum - 7,500 psi

c. IZOD impact minimum-1.5 pounds per inch of notch.

3.4 Design and construction. The filter-separator element kit shall be so designed and constructed that no parts will work loose in service. It shall be built to withstand the stresses, jars, vibrations, and other conditions incident to shipping, storage, installation, and flight line service.

* 3.4.1 Functional design. The filter-separator element kit shall be designed with elements as shown on figures 1 and 2 with the capability for installation in a Fram Corporation model FCS-2811-601 filter-separator as shown on figure 3. All element gaskets and hardware necessary to permit the element kit installation as shown on figures 1 and 2 shall be provided. The kit shall contain 60 coalescer elements and 28 separator elements. At the option of the procuring activity (see 6.2), individual separator and coalescer elements may be procured separately as shown on figures 1 and 2. The items shall satisfactorily complete all applicable tests specified in section 4.

3.4.1.1 Fuels. The filter-separator element kit shall be so designed that it can be used with fuels conforming to MIL-G-5572 and MIL-T-5624.

* 3.4.1.2 Separator element rod spacer. In order to permit mounting the separator elements in currently available pressure vessels, an element rod spacer shall be provided with each separator. The spacer shall consist of an aluminum alloy tube 5/8 inch outside diameter by 13-7/8 inches long with a wall thickness of 0.095 inch. Twenty-eight rod spacers shall be furnished with each element kit, or they may be procured separately as required (see 6.2).

3.5 Performance. When installed in a modified (see 4.2) Fram Corporation model FCS-2811-601 filter-separator, the filter-separator element kit shall be capable of meeting the performance requirements of MIL-F-8901 at a flow rate of 600 gpm, except that the maximum water removal capability shall be 5 percent by volume.



In

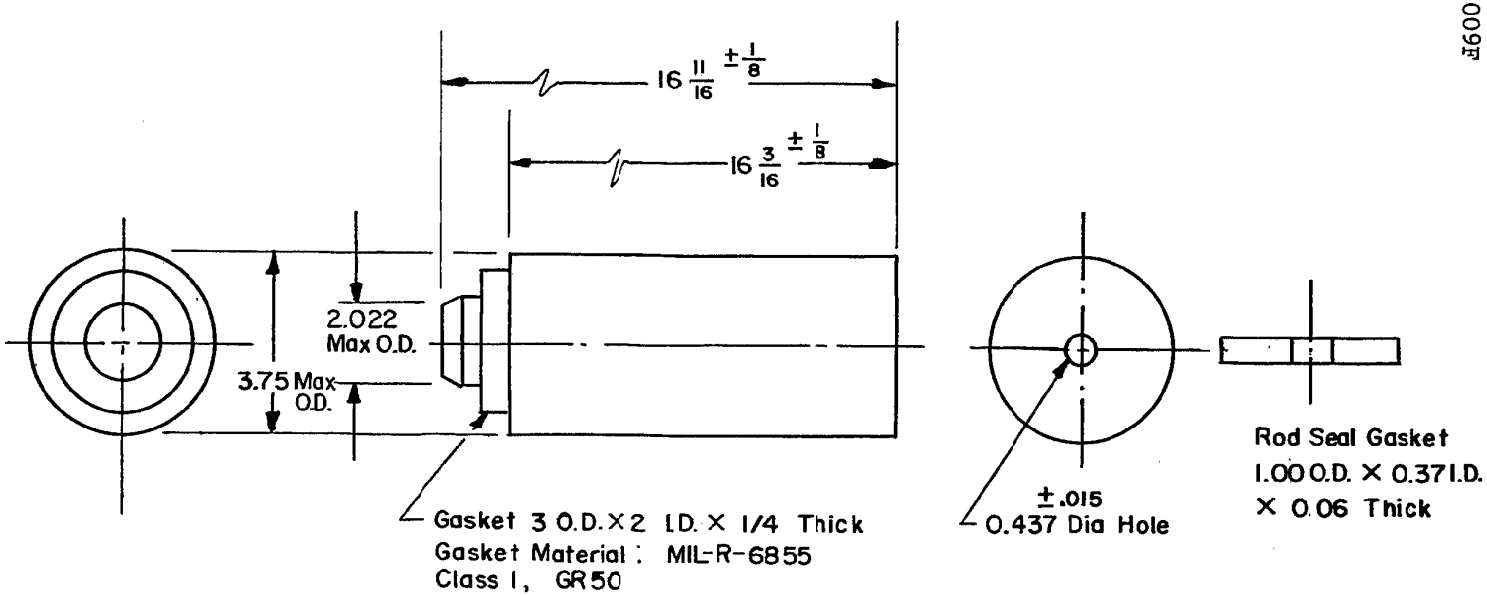


All Dimensions are in Inches. Unless Otherwise Specified, Tolerances on :

Fractions $\pm \frac{1}{16}$

Decimals ±0.010

*FIGURE 1. Coalescer Element

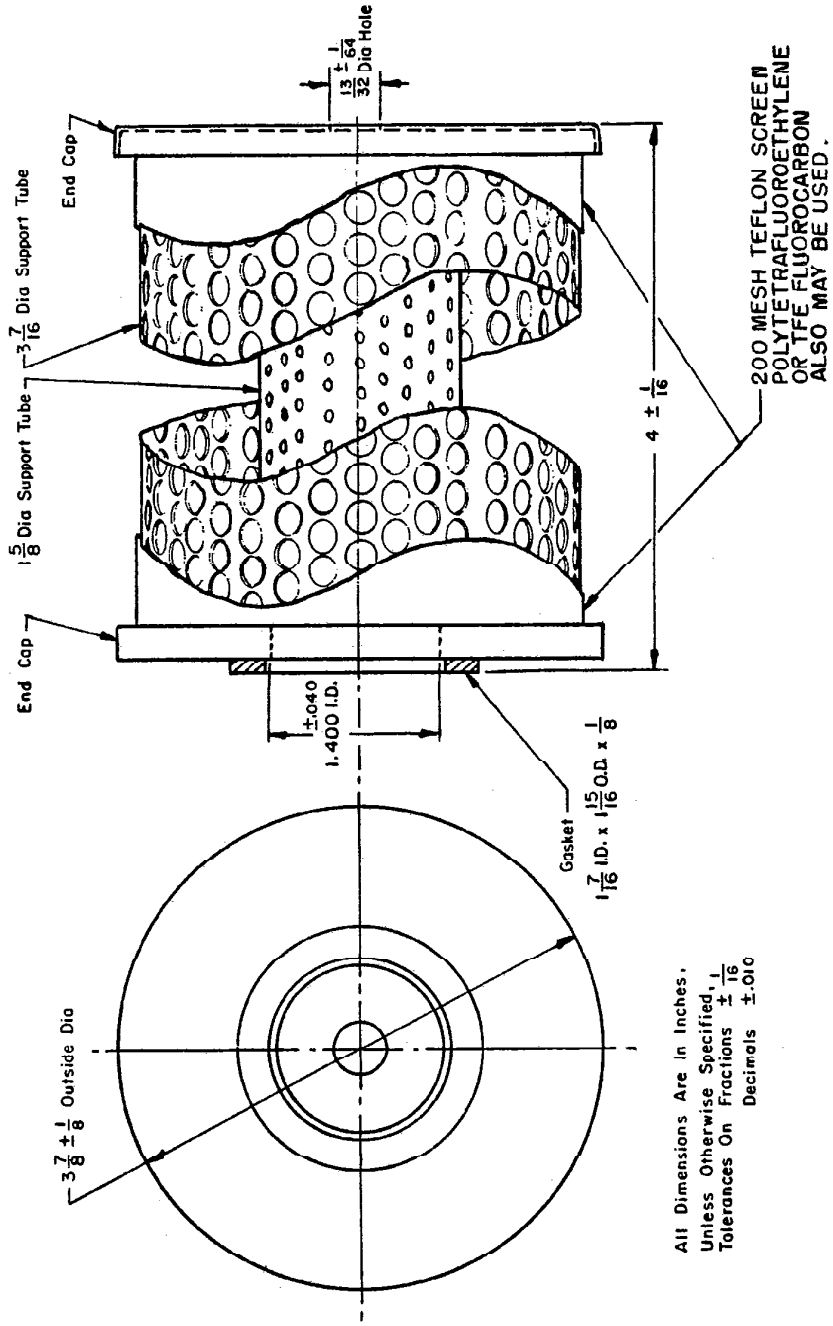


*FIGURE 2. Separator Element

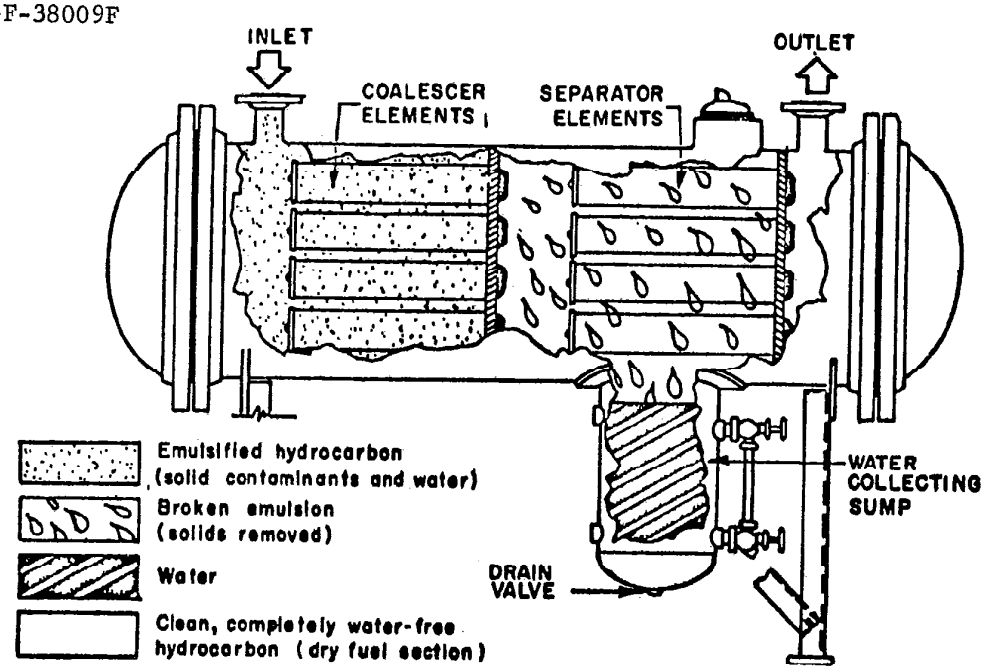


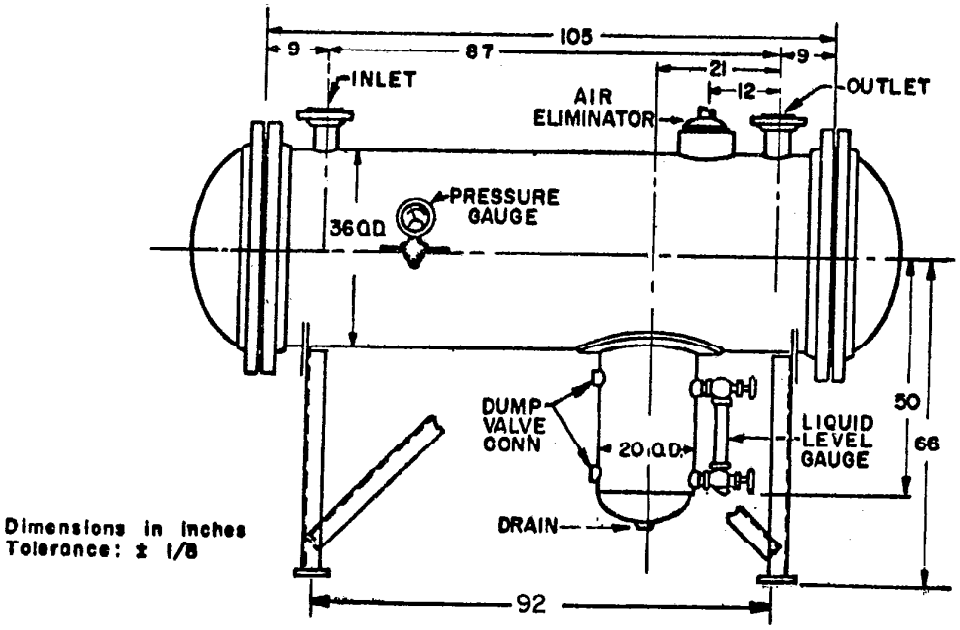


FIGURE 3. Installation in Fram Corporation FCS-2811-601 Filter-Separator

* 3.6 Identification of product. Only the following information shall be marked on the coalescer and separator elements in accordance with MIL-STD-130. If the coalescer and separator elements are marked on the sealing surface, the markings shall not affect the sealing of the element.

Manufacturer's part No. _____
Manufacturer's name or trademark _____
Date of manufacture _____

3.6.1 Manufacturer's part number. The manufacturer's part number and drawing number shall be the same.

3.6.2 Nameplate. Each FFU-11/E filter-separator element kit (for the Fram Corporation model FCS-2811-601 filter-separator) shall be provided with a nameplate to indicate the filter-separator element change criteria. The plate shall be in accordance with figure 4. Attaching instructions shall be affixed to each nameplate. When specified (see 6.2), additional nameplates shall be provided.

3.7 Workmanship. The filter-separator element kit, including all parts, shall be constructed and finished in a thoroughly workmanlike manner. Particular attention shall be given to neatness and thoroughness of marking of parts and assemblies and freedom of parts from burrs and sharp edges.

4. QUALITY ASSURANCE PROVISIONS

4.1 Responsibility for inspection. Unless otherwise specified in the contract or purchase order, the supplier is responsible for the performance of all inspection requirements as specified herein. Except as otherwise specified in the contract or order, the supplier may use his own or any other facilities suitable for the performance of the inspection requirements specified herein, unless disapproved by the Government. The Government reserves the right to perform any of the inspections set forth in the specification where such inspections are deemed necessary to assure supplies and services conform to prescribed requirements.

4.1.1 Inspection and testing. The inspection and testing of the filter-separator element kit shall be conducted on full-scale filter-separator units in accordance with MIL-F-8901 and as specified herein.

4.2 Test conditions. Unless otherwise specified (see 6.2), during all applicable testing, the filter-separator element kit shall be mounted in a Fram Corporation model FCS-2811-601 separator vessel which has been modified to accept the separator element shown on figure 2.

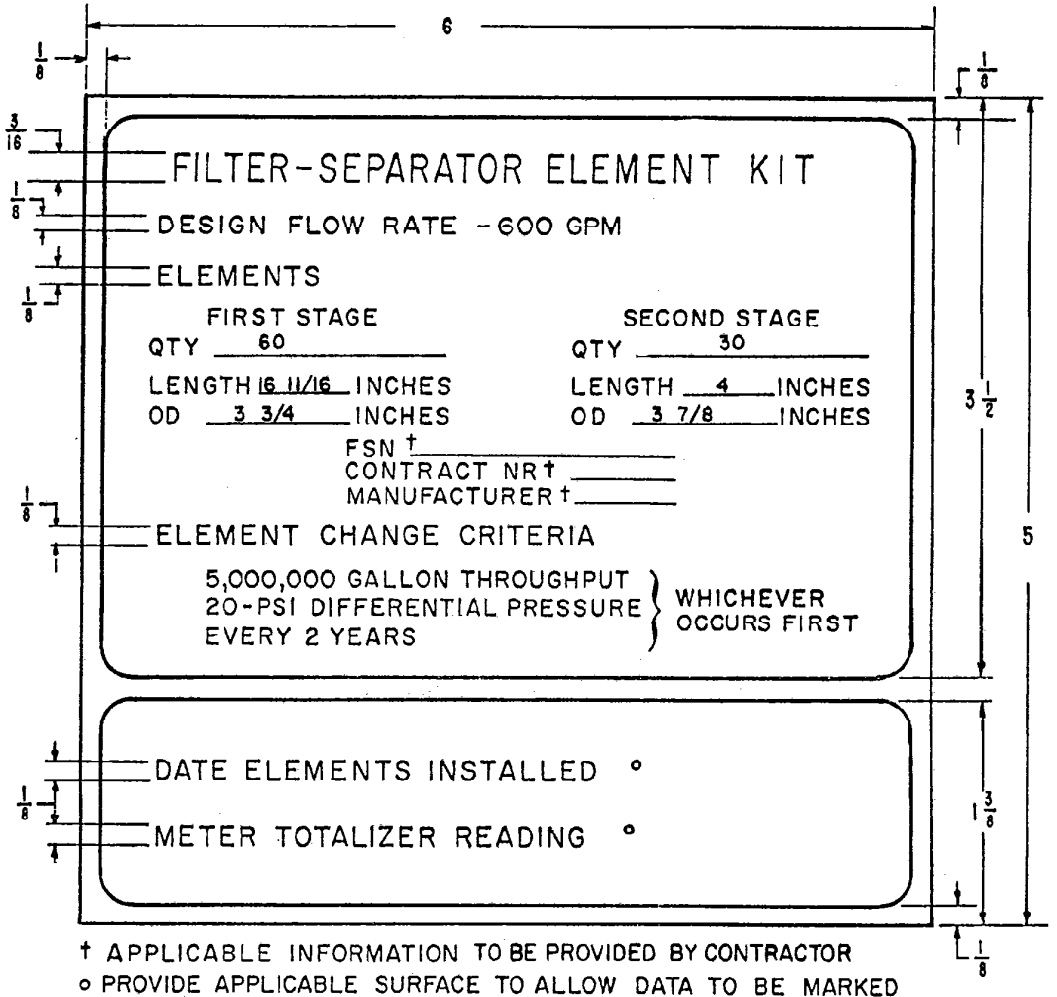


† APPLICABLE INFORMATION TO BE PROVIDED BY CONTRACTOR

° PROVIDE APPLICABLE SURFACE TO ALLOW DATA TO BE MARKED BY GOVERNMENT PERSONNEL

NOTES:

1. ALL LETTERING SHALL BE 3/32-INCH HIGH, UNLESS OTHERWISE NOTED
2. BACKGROUND SHALL BE BLUE
3. MATERIAL—MIL-P-19834 TYPE I
4. DIMENSIONS ARE IN INCHES TOLERANCES ARE ± 1/32

FIGURE 4. Nameplate

4.3 Preproduction testing (see 6.2)

4.3.1 Test samples. Unless otherwise specified (see 6.2), the preproduction test samples shall consist of 244 coalescer elements as shown on figure 1 and 116 separator elements as shown on figure 2 representative of a production lot. (See 6.4.1.) The samples shall be identified with the manufacturer's part number and such other information as required by the procuring activity. Samples shall be prepared as follows:

4.3.1.1 Data to accompany test samples. The preproduction test samples shall be accompanied by the following data:

a. Brief operating and installation data to enable test personnel to correctly install and operate the equipment

b. Engineering data in the form of assembly drawings (two sets).

4.3.1.2 Test samples and data for the procuring activity. When tests are conducted at a site other than the laboratory of the procuring activity, the following shall be furnished that activity:

a. Three copies of a test report in accordance with MIL-STD-831. In addition to results, the report shall contain complete records of the tests, including data sheets, performance curves, chronological test records, photographs, sample calculations, test procedures, and a description of the test apparatus.

b. A sample coalescer and separator element removed from the filter-separator which was subjected to the preproduction tests

c. Color photographs of a sample coalescer and separator element

d. A new coalescer and separator element.

* 4.3.2 Preproduction tests. The preproduction tests shall consist of the applicable tests specified in MIL-F-8901, except or modified as follows:

a. Water removal tests at 10 percent during the third hour are not required.

b. The inhibited fuel tests shall be performed in a single-pass system. During the inhibited fuel tests, two coalescer elements shall be mounted in parallel and installed in series with one separator element. The fuel flow rate for the test system shall be not less than 20 gpm.

c. The element kit supplier shall modify the pressure vessel with higher strength plates as necessary to meet the requirements of MIL-F-8901.

d. The electric chart recorder shall be used with the Totamitor.

e. The test fluid to be used for the Separator element test shall be isopropyl alcohol, Solox 190, chlorothene NU, or other suitable fluids capable of satisfying the test requirements without damage and which will permit rapid drying of the element prior to packaging for shipment.

f. During the full scale test, the flow rate through the filter-separator shall be 600 gpm.

g. Sections of the plastic material used in the construction of the element end caps or specially prepared test specimens shall be tested as indicated below to verify plastic material compliance. The resultant test data shall be included in the test report.

(1) Tensile strength - ASTM D638, type 1

(2) Flexural strength - ASTM D790

(3) IZOD impact strength (notched) - ASTM D256, method A.

h. Upon completion of the Life test, the filter-separator shall be disassembled and inspected to determine the condition of the filter element kit. Defects in elements such as swelling, damaged elements, and damaged gaskets shall be noted. Excessive swelling or damage to the element kit or other parts shall be cause for rejection.

4.4 Acceptance tests. The acceptance tests shall consist of the following:

a. Individual tests . . . . . See 4.4.1

b. Sampling test . . . . . See 4.4.2

4.4.1 Individual tests

4.4.1.1 Each filter-separator element kit shall be examined as required by the Examination of product paragraph of MIL-F-8901, and to determine that it conforms to the filter-separator element kits used in the preproduction tests.

4.4.1.2 Each separator element shall be subjected to the Separator element test of MIL-F-8901 and 4.3.2e herein.

4.4.2 Sampling plan and test. Samples of the filter/coalescer elements shall be selected at random from each lot in accordance with MIL-STD-105 and subjected to the Filter/coalescer element test specified in MIL-F-8901. An AQL of 1.5 percent, inspection level I, shall be established. This test shall be considered destructive.

4.4.3 Inspection of preparation for delivery. Preservation, packaging, packing, and marking shall be inspected to determine conformance to section 5 herein.

5. PREPARATION FOR DELIVERY

5.1 Preservation and packaging. Preservation and packaging shall be level A or C, as specified (see 6.2).

5.1.1 Level A

5.1.1.1 Cleaning and drying. Prior to packaging, filter-separator elements and components, if any, shall be thoroughly cleaned and dried in accordance with the applicable sections of MIL-P-116.

5.1.1.2 Kits shall be preserved and packaged one each kit in accordance with method III of MIL-P-116. One nameplate (see 3.6.2) shall be packaged with each kit. The other nameplates shall be shipped in accordance with the instructions of the contracting officer. (See 6.2.)

5.1.1.2.1 Components of each coalescer element and separator element, consisting of adapters and fittings, if any, shall be preserved and packaged in accordance with method III of MIL-P-116, and placed in a container conforming to PPP-B-566 or PPP-B-676. Closure and sealing of containers shall be in accordance with the appendix of the applicable specification.

5.1.1.2.2 Each coalescer element and each separator element shall be inserted and sealed in a polyethylene bag conforming to L-P-378 and placed one each in a container conforming to PPP-B-566 or PPP-B-676 together with components as packaged in 5.1.1.2.1. Closure and sealing of the container shall be in accordance with the appendix of the applicable specification. Boxes and bags shall be of minimum size consistent with the size of items being packaged.

5.1.2 Level C. Cleaning, drying, preservation, and packing shall be in accordance with the manufacturer's commercial practice, except the required coalescer and separators to compose one each kit shall be packed in a single container to provide kit application of this specification. One nameplate (see 3.6.2) shall be packaged with each kit. The other nameplate shall be shipped in accordance with the instructions of the contracting officer. (See 6.2).

5.2 Packing. Packing shall be level A, B, or C, as specified (see 6.2).

5.2.1 Level A. Each complete kit shall be packed in a snug-fitting overseas-type box conforming to PPP-B-601 (style optional) or in a class 2 box conforming to PPP-B-621 (style optional). The closure and strapping shall be in accordance with the applicable container specification. The strapping shall be zinc coated.

5.2.2 Level B. Each complete kit shall be packed in boxes as specified in 5.2.1, except the boxes shall be of the domestic type (class and style optional) or in a class 2, grade A, style E container conforming to PPP-B-640. Closure shall be in accordance with the applicable container specification.

5.2.3 Level C. Kits, preserved and packaged as specified in 5.1, which require overpacking for acceptance by the carrier, shall be packed in shipping containers which will insure safe delivery at the lowest transportation rate. Containers shall meet Consolidated Freight Rules or regulations of other common carriers as applicable to the mode of transportation.

5.3 Marking. Unit packs and exterior shipping containers shall be marked in accordance with MIL-STD-129. The nomenclature shall be:

FILTER-SEPARATOR ELEMENT KIT, LIQUID FUEL FFU-11/E.

6. NOTES

6.1 Intended use. The FFU-11/E filter-separator element kit is intended for use as a replacement item in ground aviation liquid fuel filtering and servicing systems. The filter-separator element kit is intended to replace Fram Corporation models CC1 and CS11 elements in Fram Corporation model FSG-2811-601 filter-separators.

* 6.2 Ordering data. Procurement documents should specify the following:

a. Title, number, and date of this specification.

b. Quantity of coalescers, separators, or rod spacers that will be procured separately (see 3.4.1 and 3.4.1.2).

c. The quantity of additional nameplates required (see 3.6.2) and shipping instructions for them (see 5.1.1.2 and 5.1.2).

d. If the separator vessel is not required to be modified to meet the test conditions specified herein (see 4.2).

e. Location and conditions for preproduction testing (see 4.3).

f. If other than 244 coalescer elements and 116 separator elements are required (see 4.3.1).

g. Selection of applicable levels of preservation and packaging, and packing (see 5.1 and 5.2).

h. Quantities required and design flow rates of nameplates for kits for other filter-separators (see 6.5b).

6.3 Abbreviations. In order to save space and to avoid the spelling out of repetitious words and phrases, the following abbreviations have been used in the text of this specification:

AQL . . . . . acceptable quality level

ASTM . . . . . American Society for Testing and Materials

conn . . . . . connection
FSN . . . . . federal stock number
gpm . . . . . gallons per minute
ID . . . . . inside diameter
MATL . . . . . material
max . . . . . maximum
min . . . . . minimum
OD . . . . . outside diameter
PSI . . . . . pounds per square inch
QTY . . . . . quantity

6.4 Definition. For the purpose of this specification, the following definition will apply:

6.4.1 Lot. All filter-separator element kits of the same part number manufactured in one production run and submitted for acceptance at the same time shall be considered a lot for acceptance purposes.

6.5 Kits for other filter-separators. Other kits may be assembled from the coalescer and separator elements which have met the requirements of this specification. Such kits for the models of filter-separators specified in table I shall be subject to the following provisions:

a. These kits shall not use the FFU-11/E type designation, because the FFU-11/E kits contain 60 coalescer elements and 28 separator elements.

b. Nameplates shall be furnished as specified by the procuring activity (see 6.2). Nameplates shall conform to figure 4, except that instead of the quantities, the design flow rate of 600 gpm, and the 5,000,000 gallon throughput, the values specified in table I shall be used.

TABLE I. Kits for Other Filter-Separators

| Application (Fram Corporation) Filter-Separator Model No. | Design Flow Rate (GPM) (See 6.5b) | Quantity of Coalescer Elements | Quantity of Separator Elements | Element Change Gallon Throughput (See 6.5b) |
|---|---|---|---|---|
| FCS-4011-801 | 800 | 80 | 40 | 6,700,000 |
| FCS-2011-401 | 400 | 40 | 20 | 3,300,000 |
| FCS-1411-301 | 300 | 30 | 14 | 2,500,000 |
| FCS-1011-201 | 200 | 20 | 10 | 1,700,000 |
| FCS-511-101 | 100 | 10 | 5 | 830,000 |

c. All coalescer and filter elements used in any single kit should be the products of the same manufacturer, because the overall performance of both must be considered as a unit. Using elements of different manufacturers may affect performance.

6.6 Contract administration

6.6.1 The contracting organization should require that a prospective contractor shall have or can contract for a suitable test system prior to the award of any contracts for filtration equipment. A test system is the piping, test requirement apparatus, arrangement of test components, laboratory equipment, laboratory supplies, and techniques used during the evaluation of fuel filtration equipment.

6.6.2 The contracting organization should provide for Government inspection during the preproduction buildup and test in addition to providing Government inspection after production is released.

6.6.3 Prior to issuance of a procurement bid for proposal (IFB/RFP), the organization should contact the engineering activity having technical responsibility for the specification to confirm that the latest edition of the specification is being cited.

6.7 Identification of changes. The margins of this specification are marked with an asterisk to indicate where changes (additions, modifications, corrections, deletions) from the previous issue were made. This was done as a convenience only and the Government assumes no liability whatsoever for any inaccuracies in these notations. Bidders and contractors are cautioned to evaluate the requirements of this document based on the entire content irrespective of the marginal notations and relationship to the last previous issue.

Custodians:
Air Force - 11
Army - ME

Review activity:
Air Force - 84

Preparing activity:
Air Force - 11

Project No. 4330-0106