THE REQUIREMENTS FOR ACQUIRING THE PRODUCT(s) DESCRIBED HEREIN SHALL CONSIST OF THIS SPECIFICATION SHEET AND THE ISSUE OF THE FOLLOWING SPECIFICATION LISTED IN THAT ISSUE OF THE DODISS SPECIFIED IN THE SOLICITATION:
MIL-F-5509

THIS SPECIFICATION IS APPROVED FOR USE BY ALL DEPARTMENTS AND AGENCIES OF THE DEPARTMENT OF DEFENSE.

Form Approved
OMB No. 0704-0188

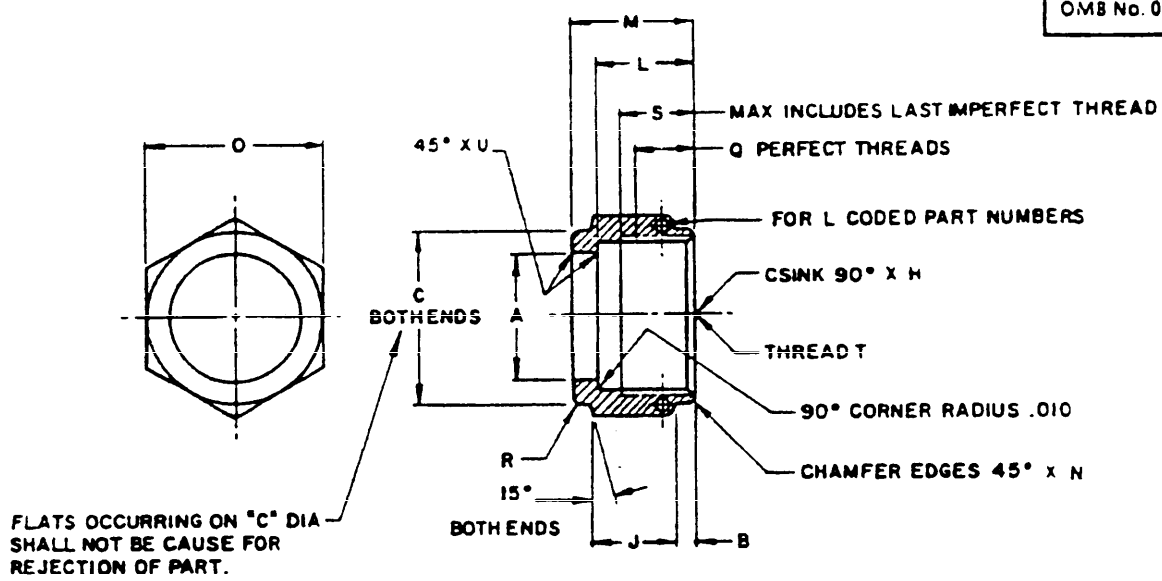

(a) DIMENSION A AND THREAD T SHALL BE CONCENTRIC WITHIN .005 FIM.

REQUIREMENTS:

DIMENSIONS IN INCHES.
UNLESS OTHERWISE SPECIFIED, TOLERANCES: DECIMALS +.005, ANGLES +5°.
RADIUS OR BREAK ALL CORNERS .005 +.005/-.000. REMOVE ALL BURRS AND SLIVERS.
MATERIAL: ALUMINUM ALLOY, STEEL, CORROSION RESISTANT STEEL, TITANIUM ALLOY. SEE PROCUREMENT SPECIFICATION.
FINISH: SEE PROCUREMENT SPECIFICATION.
ADD MATERIAL CODE LETTER AFTER DASH NUMBER.
ADD L BEFORE DASH NUMBER FOR LOCKWIRE HOLES.
ADD N AFTER MATERIAL CODE LETTER FOR DRY FILM LUBRICATION (APPLICABLE ONLY TO J AND K CODE MATERIALS).
WHEN SPECIFIED, CRES NUTS SHALL BE COATED WITH DRY FILM LUBRICANT PER MIL-L-46010 ON ALL INTERNAL SURFACES. OVERSPRAY ON C DIAMETER IS PERMITTED.
IF REQUIRED, LOCKWIRE HOLES TO BE DRILLED IN ACCORDANCE WITH AS1043.

NOTES:

THIS STANDARD TAKES PRECEDENCE OVER DOCUMENTS REFERENCED HEREIN.
TITANIUM IS NOT RECOMMENDED FOR USE IN OXYGEN SYSTEMS.
OLD STOCK MANUFACTURED TO REV 17 REQUIREMENTS IS ACCEPTABLE UNTIL 1994. AS OF 1 JAN 1994, ONLY ITEMS MEETING THE LATEST REVISION SHALL BE ACCEPTABLE.
EXAMPLE OF PART NUMBERS:

AN818-4	NUT, .250 TUBING, STEEL, WITHOUT LOCKWIRE HOLE
AN818-4D	NUT, .250 TUBING, ALUMINUM ALLOY (EXCEPT 7075-T73), WITHOUT LOCKWIRE HOLES.
AN818-8J	NUT, .500 TUBING, CRES, TYPE 304, WITHOUT LOCKWIRE HOLES.
AN818-8K	NUT, .500 TUBING, CRES, TYPE 316, WITHOUT LOCKWIRE HOLES.
AN818-8T	NUT, .500 TUBING, TITANIUM ALLOY, WITHOUT LOCKWIRE HOLES.
AN818-4W	NUT, .250 TUBING, 7075-T73 ALUMINUM ALLOY, WITHOUT LOCKWIRE HOLES.
AN818-L4	NUT, .250 TUBING, STEEL, WITH LOCKWIRE HOLES.
AN818-L8JN	NUT, .500 TUBING, CRES, TYPE 304, WITH LOCKWIRE HOLES, COATED INTERNALLY WITH SOLID FILM LUBRICANT (J AND K MATERIALS ONLY).

REVISION LETTERS ARE NOT USED TO DENOTE CHANGES DUE TO THE EXTENSIVENESS OF THE CHANGES.

INCH-POUND

PREPARING ACTIVITY AIR FORCE-82 CUSTODIANS ARMY NAVY-AS AIR FORCE-99 DLA REVIEW ARMY-ME, AV DLA-CS USER PROJECT NUMBER 4730-1108	MILITARY SPECIFICATION SHEET TITLE NUT, TUBE COUPLING, SHORT	SPECIFICATION SHEET NUMBER AN818, REV 19 15 JUN 94 SUPERSEDING AN818, Rev 18, 10 FEB 88 AMSC N/A FSC 4730

DISTRIBUTION STATEMENT A. Approved for public release, distribution is unlimited.

Form Approved
OMB No. 0704-0188

THE REQUIREMENTS FOR ACQUIRING THE PRODUCT(s) DESCRIBED HEREIN SHALL CONSIST OF THIS SPECIFICATION SHEET AND THE ISSUE OF THE FOLLOWING SPECIFICATION LISTED IN THAT ISSUE OF THE DODISS SPECIFIED IN THE SOLICITATION:

MIL-F-5509

DASH NO.	TUBING OD	(a) THREAD T MIL-S-8879	(a) A +.003 -.000 DIA	B	C +.000 -.010 DIA	H +.031 -.000 DIA.	J		
2	.125	.3125-24UNJF-3B	.180	.109	.375	.312	.312		
3	.188	.3750-24UNJF-3B	.242	.141	.437	.375	.375		
4	.250	.4375-20UNJF-3B	.305	.125	.562	.438	.400		
5	.312	.5000-20UNJF-3B	.374	.125	.625	.500	.484		
6	.375	.5625-18UNJF-3B	.440	.156	.687	.562	.500		
8	.500	.7500-16UNJF-3B	.570	.156	.875	.750	.578		
10	.625	.8750-14UNJF-3B	.698	.172	1.000	.875	.688		
12	.750	1.0625-12UNJ -3B	.834	.125	1.250	1.062	.750		
16	1.000	1.3125-12UNJ -3B	1.089	.219	1.500	1.312	.766		
20	1.250	1.6250-12UNJ -3B	1.347	.312	2.000	1.625	.766		
24	1.500	1.8750-12UNJ -3B	1.617	.359	2.250	1.875	.875		
28	1.750	2.2500-12UNJ -3B	1.890	.375	2.625	2.250	1.000		
32	2.000	2.5000-12UNJ -3B	2.167	.438	2.875	2.500	1.078		
40	2.500	3.0000-12UNJ -3B	2.667	.406	3.375	3.000	.969		
48	3.000	3.5000-12UNJ -3B	3.180	.438	4.000	3.500	1.063		

DASH NO.	L	M		N	O		Q MIN	R RAD	S MAX	U	
2	.460	.542	±.005	.010	.375	+.003 -.004	.251	.031	.376	.005	
3	.506	.604			.438		.338	.031	.428		
4	.532	.620			.563		.380	.031	.500		
5	.579	.683			.625		.401	.031	.542		
6	.603	.724	±.010		.688		.413	.047	.569	.010	
8	.723	.849			.875		.484	.047	.647		
10	.817	.974			1.000		.542	.047	.727		
12	.868	1.021			1.250		.537	.062	.753		
16	.962	1.131			1.500		.563	.078	.813		
20	1.017	1.224			2.000	±.016		.094			
24	1.170	1.412			2.250	±.020	.661	.094	.911		
28	1.316	1.568		.015	2.625		.730	.094	.930	.015	
32	1.462	1.740			2.875		.844	.109	1.094		
40	1.328	1.631			3.375		.718	.109	.968		
48	1.452	1.756			4.000		.781	.109	1.031		

THIS SPECIFICATION IS APPROVED FOR USE BY ALL DEPARTMENTS AND AGENCIES OF THE DEPARTMENT OF DEFENSE.

INCH-POUND

PREPARING ACTIVITY AIR FORCE-82
CUSTODIANS ARMY NAVY-AS
AIR FORCE-99 DLA
REVIEW ARMY-ME, AV DLA-CS
USER
PROJECT NUMBER 4730-1108

MILITARY SPECIFICATION SHEET

TITLE

NUT, TUBE COUPLING, SHORT

SPECIFICATION SHEET NUMBER
AN818, REV 19 15 JUN 94

SUPERSEDING
AN818, Rev 18, 10 FEB 88

AMSC N/A FSC 4730

DISTRIBUTION STATEMENT A Approved for public release, distribution is unlimited.

DD Form 672, MAY 88 Previous editions are obsolete

U.S. GOVERNMENT PRINTING OFFICE 1994 [illegible]