FED. SUP CLASS
4730

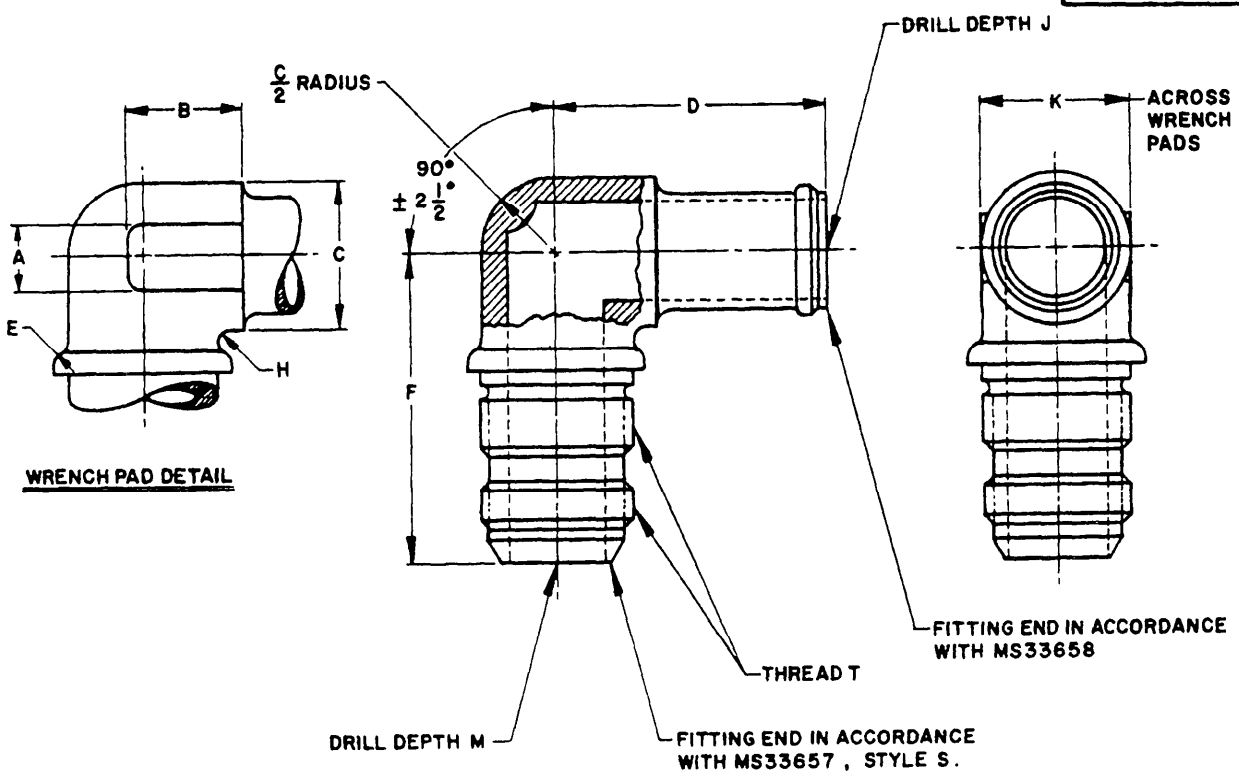

MATERIAL: COPPER ALLOY; ALUMINUM ALLOY; CORROSION RESISTANT STEEL (CRES); BARS, SHAPES, OR FORGINGS (SEE PROCUREMENT SPECIFICATION).

FINISH: SEE PROCUREMENT SPECIFICATION.

NO CODE LETTER IN PART NUMBER FOR COPPER ALLOY.
ADD D AFTER DASH NUMBER FOR ALUMINUM ALLOY (EXCEPT 7075-T73).
ADD J AFTER DASH NUMBER FOR CRES, TYPE 304.
ADD K AFTER DASH NUMBER FOR CRES, TYPE 316.
ADD S AFTER DASH NUMBER FOR CRES, TYPE 347.
ADD W AFTER DASH NUMBER FOR 7075-T73 ALUMINUM ALLOY.

EXAMPLE OF PART NUMBER:
AN838-8 - ELBOW, 1/2 TUBING, COPPER ALLOY.
AN838-8D - ELBOW, 1/2 TUBING ALUMINUM ALLOY (EXCEPT 7075-T73).
AN838-8J - ELBOW, 1/2 TUBING, CRES, TYPE 304.
AN838-8K - ELBOW, 1/2 TUBING, CRES, TYPE 316.
AN838-8S - ELBOW, 1/2 TUBING, CRES, TYPE 347.
AN838-8W - ELBOW, 1/2 TUBING, 7075-T73 ALUMINUM ALLOY.

USE IN MANNER INDICATED ON MS21344 AND AND10065.

BREAK ALL SHARP EDGES AND REMOVE ALL HANGING BURRS AND SLIVERS.

DIMENSIONS IN INCHES. UNLESS OTHERWISE SPECIFIED, TOLERANCES: FRACTIONS ±1/64, DECIMALS ±.005.

FOR DESIGN FEATURE PURPOSES, THIS STANDARD TAKES PRECEDENCE OVER PROCUREMENT DOCUMENTS REFERENCED HEREIN.

REFERENCED DOCUMENTS SHALL BE OF THE ISSUE IN EFFECT ON DATE OF INVITATIONS FOR BID.

(8) ENTIRE STANDARD REVISED

APPROVED 24 JUL 44 REVISED (8) 30AUG82

USER ACTIVITIES

REVIEWER ACTIVITIES
DLA - CS

This Military Standard is approved for use by HQ AFLC CASO/LODS, Federal Center, Battle Creek, MI 49016, Department of the Air Force, and is available for use by all Departments and agencies of the Department of Defense.

P. A. AIR FORCE - 82 Other Cust AF 99 (3)	INTERNATIONAL INTEREST	AIR FORCE-NAVY AERONAUTICAL STANDARD ELBOW, TUBE TO HOSE, 90°	AN838
PROCUREMENT SPECIFICATION MIL-F-5509	SUPERSEDES:		SHEET 1 OF 2

DD FORM 1 MAY 73 672-1 *Limited Coordination*

PREVIOUS EDITIONS OF THIS FORM ARE OBSOLETE

PROJECT NUMBER 4730-F316

FED. SUP CLASS
4730

DASH NO.	HOSE ID	TUBING OD	THREAD T (REF)	A APPROX	B APPROX	C DIA
4	1/4	1/4	7/16-20UNJF-3A	1/4	5/16	7/16
6	3/8	3/8	9/16-18UNJF-3A	5/16	1/2	9/16
8	1/2	1/2	3/4 -16UNJF-3A	7/16	5/8	3/4
10	5/8	5/8	7/8 -14UNJF-3A		3/4	7/8
12	3/4	3/4	1-1/16-12UNJ -3A	1/2	15/16	1-1/16
16	1	1	1-5/16-12UNJ -3A	9/16	1	1-5/16
20	1-1/4	1-1/4	1- 5/8-12UNJ -3A		1- 1/4	1-5/8
24	1-1/2	1-1/2	1- 7/8-12UNJ -3A	5/8	1- 1/2	1-7/8

DASH NO.	D +3/64 -0	E RAD	F +3/64 -0	H RAD	J +3/64 -0	K	M +3/64 -0
4	1-27/32	1/16	1- 9/16	1/16	1-29/32	7/16	1-19/32
6	1-15/16		1-47/64	3/32	2	9/16	1-49/64
8	2- 1/32	3/32	2- 1/32		2- 7/64	3/4	2- 7/64
10	2- 3/32		2- 9/32	1/8	2-11/64	7/8	2-25/64
12	2- 1/4		2- 9/16		2- 3/8	1-1/16	2-11/16
16	2- 3/8	1/8	2-11/16		2-35/64	1-5/16	2- 7/8
20	2-17/32		2-59/64	3/16	2-49/64	1-5/8	3- 5/32
24	2-21/32		3- 1/16		2-15/16	1-7/8	3-23/64

(8) ENTIRE STANDARD REVISED

P. A.
AIR FORCE 82
Other Cust
AF 99
(8)

INTERNATIONAL INTEREST

AIR FORCE-NAVY AERONAUTICAL STANDARD

ELBOW, TUBE TO HOSE, 90°

AN838

PROCUREMENT SPECIFICATION
MIL-F-5509

SUPERSEDES:

SHEET 2 OF 2

DD FORM 1 MAY 73 672-1 Limited Coordination

PREVIOUS EDITIONS OF THIS FORM ARE OBSOLETE

PROJECT NO. 4730-F316

APPROVED 24 JULY 1944 REVISED (8) FOR CHANGES SEE PAGES 1 & 2. 30AUG82

USER ACTIVITIES:

REVIEWER ACTIVITIES:
DLA - CS

This Military Standard is approved for use by HQ AFLC CASO/LODS, Federal Center, Battle Creek, MI 49016, Department of the Air Force, and is available for use by all Departments and agencies of the Department of Defense.