FED. SUP CLASS
4730

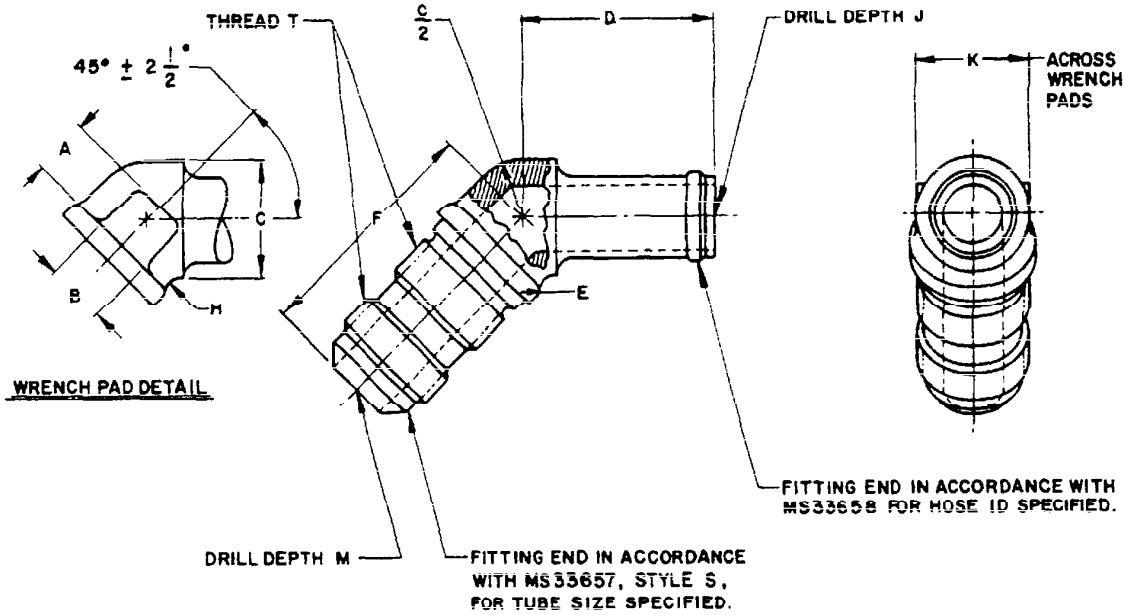

MATERIAL: COPPER ALLOY; ALUMINUM ALLOY; CORROSION RESISTANT STEEL (CRES); BARS, SHAPES, OR FORGINGS (SEE PROCUREMENT SPECIFICATION).

FINISH: SEE PROCUREMENT SPECIFICATION.

NO CODE LETTER IN PART NUMBER FOR COPPER ALLOY.
ADD D AFTER DASH NUMBER FOR ALUMINUM ALLOY (EXCEPT 7075-T73).
ADD J AFTER DASH NUMBER FOR CRES, TYPE 304.
ADD K AFTER DASH NUMBER FOR CRES, TYPE 316.
ADD S AFTER DASH NUMBER FOR CRES, TYPE 347.
ADD W AFTER DASH NUMBER FOR 7075-T73 ALUMINUM ALLOY.

EXAMPLE OF PART NUMBERS:
AN839-8 - ELBOW, 1/2 TUBING, COPPER ALLOY.
AN839-8D - ELBOW, 1/2 TUBING, ALUMINUM ALLOY (EXCEPT 7075-T73).
AN839-8J - ELBOW, 1/2 TUBING, CRES, TYPE 304.
AN839-8K - ELBOW, 1/2 TUBING, CRES, TYPE 316.
AN839-8S - ELBOW, 1/2 TUBING, CRES, TYPE 347.
AN839-8W - ELBOW, 1/2 TUBING, 7075-T73 ALUMINUM ALLOY.

BREAK ALL SHARP EDGES AND REMOVE ALL HANGING BURRS AND SLIVERS.

USE IN MANNER INDICATED ON MS21344 AND AND10065.

DIMENSIONS IN INCHES. UNLESS OTHERWISE SPECIFIED, TOLERANCES: FRACTIONS ±1/64, DECIMALS ±.005.

FOR DESIGN FEATURE PURPOSES, THIS STANDARD TAKES PRECEDENCE OVER PROCUREMENT DOCUMENTS REFERENCED HEREIN.

REFERENCED DOCUMENTS SHALL BE OF THE ISSUE IN EFFECT ON DATE OF INVITATIONS FOR BID.

(7) ENTIRE STANDARD REVISED

APPROVED 24 JUL 44 REVISED (7) 30 AUG 82

P. A. AIR FORCE - 82 Other Cust AF 99 (7)	INTERNATIONAL INTEREST	AIR FORCE-NAVY AERONAUTICAL STANDARD ELBOW, TUBE TO HOSE, 45°	AN839
PROCUREMENT SPECIFICATION MIL-F-5509	SUPERSEDES:		SHEET 1 OF 2

DD FORM 1 MAY 73 672-1 Limited Coordination

PREVIOUS EDITIONS OF THIS FORM ARE OBSOLETE

PROJECT NO. 4730-F317

USER ACTIVITIES

REVIEWER ACTIVITIES
DLA - CS

This Military Standard is approved for use by HQ AFLC CASO/LODS, Federal Center, Battle Creek, MI 49016, Department of the Air Force, and is available for use by all Departments and agencies of the Department of Defense.

FED. SUP CLASS
4730

USER ACTIVITIES

DASH NO.	HOSE ID	TUBING OD	THREAD T (REF)	A APPROX	B APPROX	C DIA
4	1/4	1/4	7/16-20UNJF-3A	7/32	1/4	7/16
6	3/8	3/8	9/16-18UNJF-3A	9/32	3/8	9/16
8	1/2	1/2	3/4 -16UNJF-3A	11/32	7/16	3/4
10	5/8	5/8	7/8 -14UNJF-3A	7/16	1/2	7/8
12	3/4	3/4	1-1/16-12 UNJ-3A	1/2	9/16	1-1/16
16	1	1	1-5/16-12 UNJ-3A	9/16	11/16	1-5/16
20	1-1/4	1-1/4	1-5/8 -12 UNJ-3A	11/16	1	1-5/8
24	1-1/2	1-1/2	1-7/8- 12 UNJ-3A	3/4	1- 1/8	1-7/8

REVIEWER ACTIVITIES
DLA -- CS

DASH NO.	D +3/64 -0	E RAD	F +3/64 -0	H RAD	J +3/64 -0	K	M +3/64 -0
4	1-11/16	1/16	1-27/64	1/16	1- 3/4	7/16	1-15/32
6	1-23/32		1- 9/16	3/32	1-51/64	9/16	1-39/64
8	1- 3/4	3/32	1-53/64		1-13/16	3/4	1-15/16
10	1-51/64		2- 3/64	1/8	1- 7/8	7/8	2-11/64
12	1-53/64		2- 9/32		1-61/64	1-1/16	2-27/64
16	1-57/64	1/8	2-25/64		2- 3/64	1-5/16	2-19/32
20	1-31/32		2-35/64	3/16	2-11/64	1-5/8	2-51/64
24	2- 1/32		2-43/64		2- 9/32	1-7/8	2-31/32

This Military Standard is approved for use by HQ AFLC CASO/LODS, Federal Center, Battle Creek, MI 49016, Department of the Air Force, and is available for use by all Departments and agencies of the Department of Defense.

APPROVED 24 JULY 44 REVISED (7) FOR CHANGES SEE PAGES 1 & 2. 30AUG82

(7) ENTIRE STANDARD REVISED

P. A.
AIR FORCE-
Other Cust
AF 99 82 7

INTERNATIONAL INTEREST

AIR FORCE-NAVY AERONAUTICAL STANDARD

ELBOW, TUBE TO HOSE, 45°

AN839

PROCUREMENT SPECIFICATION
MIL-F-5509

SUPERSEDES:

SHEET 2 OF 2

DD FORM 1 MAY 73 672-1 Limited Coordination

PREVIOUS EDITIONS OF THIS FORM ARE OBSOLETE

PROJECT NO. 4730-F317