FED. SUP CLASS
4730

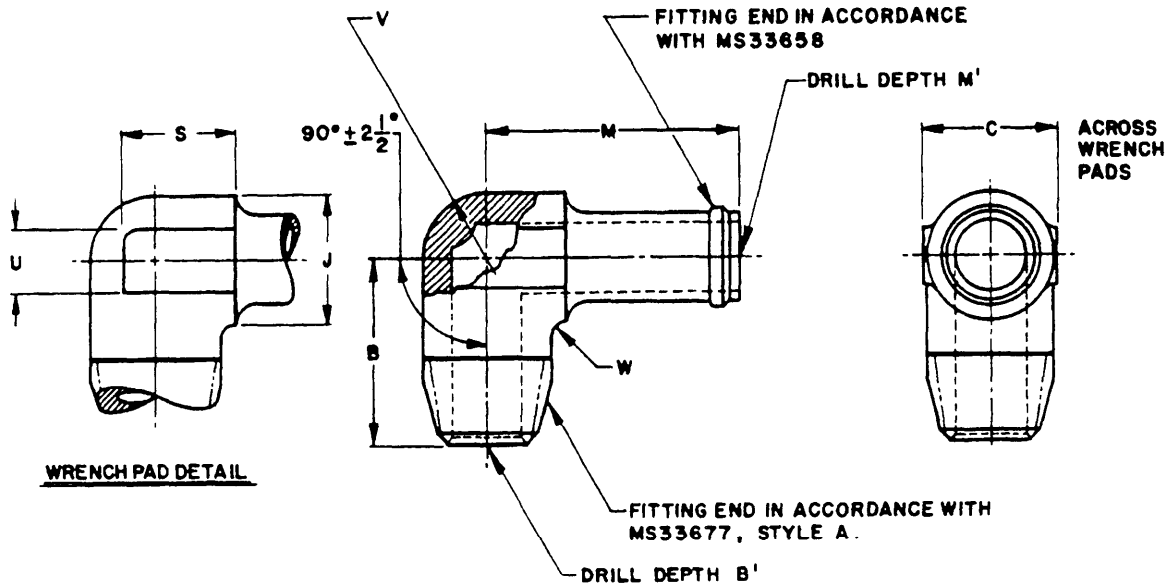

MATERIAL: COPPER ALLOY; ALUMINUM ALLOY; STEEL; BARS, SHAPES, OR FORGINGS (SEE PROCUREMENT SPECIFICATION).

FINISH: SEE PROCUREMENT SPECIFICATION.

NO CODE LETTER IN PART NUMBER FOR COPPER ALLOY.
ADD D AFTER DASH NUMBER FOR ALUMINUM ALLOY. (EXCEPT 7075-T73)
ADD S AFTER DASH NUMBER FOR STEEL
ADD W AFTER DASH NUMBER FOR 7075-T73 ALUMINUM ALLOY.

EXAMPLE OF PART NUMBERS:
AN842-6 - ELBOW, 3/8 ID HOSE, COPPER ALLOY.
AN842-6D - ELBOW, 3/8 ID HOSE, ALUMINUM ALLOY (EXCEPT 7075-T73).
AN842-6S - ELBOW, 3/8 ID HOSE, STEEL.
AN842-6W - ELBOW, 3/8 ID HOSE, 7075-T73 ALUMINUM ALLOY.

BREAK ALL SHARP EDGES AND REMOVE ALL HANGING BURRS AND SLIVERS.

DIMENSIONS IN INCHES. UNLESS OTHERWISE SPECIFIED, TOLERANCE: FRACTIONS ±1/64.

FOR DESIGN FEATURE PURPOSES, THIS STANDARD TAKES PRECEDENCE OVER PROCUREMENT DOCUMENTS REFERENCED HEREIN.

REFERENCED DOCUMENTS SHALL BE OF THE ISSUE IN EFFECT ON DATE OF INVITATIONS FOR BID.

INACTIVE FOR DESIGN AFTER 8 APRIL 1953. NO SUPERSEDING AN STANDARD. SEE MIL-STD-962 FOR STATUS CRITERIA.

(11) ENTIRE STANDARD REVISED

APPROVED 27 FEB 41 REVISED (11) 2 Sept 82

P. A. AIR FORCE 82 Other Cust NAVY - AS AIR FORCE - 99	INTERNATIONAL INTEREST	AIR FORCE-NAVY AERONAUTICAL STANDARD ELBOW - PIPE TO HOSE, 90°	AN842
PROCUREMENT SPECIFICATION MIL-F-5509	SUPERSEDES:		SHEET 1 OF 2

DD FORM 1 MAY 73 672-1 (COORDINATED) PREVIOUS EDITIONS OF THIS FORM ARE OBSOLETE

PROJECT NO. 4730-0320

USER ACTIVITIES:

REVIEWER ACTIVITIES: ARMY - ME, AV DLA - CS

This military standard is approved for use by all Departments and Agencies of the Department of Defense. Selection for all new engineering and design applications and for repetitive use shall be made from this document.

FED. SUP CLASS
4730

DASH NO.	HOSE ID	PIPE THD NPT	B +3/64 -0	B' +3/64 -0	C	J DIA
4	1/4	1/8	25/32	25/32	7/16	7/16
6	3/8	1/4	1-3/32	1- 1/8	5/8	37/64
8	1/2	3/8	1-3/16	1- 1/4	3/4	23/32
10	5/8	1/2	1-13/64	1-39/64	15/16	57/64
12	3/4	3/4	1-19/32	1-23/32	1- 1/8	1- 3/32
16	1					
17		1	1-61/64	2- 5/64	1- 3/8	1- 3/8
20	1-1/4	1-1/4	2- 1/16	2- 3/16	1- 3/4	1-23/32
21		1			1- 3/8	1- 3/8
24	1-1/2	1-1/2	2- 3/16	2-5/16	2	1-61/64
25		1-1/4	2- 1/32	2-19/64	1- 3/4	1-23/32

DASH NO.	M +3/64 -0	M' +3/64 -0	S APPROX	U APPROX	V RAD	W RAD
4	1-25/32	1-25/32	11/32	5/16	7/32	1/16
6	1-29/32	1-15/16	1/2		19/64	3/32
8	1-63/64	2- 3/64	5/8	7/16	23/64	
10	2-11/64	2-19/64	3/4		7/16	1/8
12	2-13/64	2-21/64	15/16	1/2	35/64	
16						
17	2-11/32	2-15/32	1- 1/8	9/16	11/16	
20	2-33/64	2-41/64	1- 5/16		55/64	
21	2-11/32	2-15/32	1- 1/8		11/16	
24	2-41/64	2-49/64	1- 1/2	5/8	31/32	
25					55/64	

(11) ENTIRE STANDARD REVISED

APPROVED 27 FEB 41 REVISED (11) FOR CHANGES SEE PAGES 1 & 2. 2 Sept 82

USER ACTIVITIES:

REVIEWER ACTIVITIES:
ARMY - ME, AV
DLA - CS

This military standard is approved for use by all Departments and Agencies of the Department of Defense. Selection for all new engineering and design applications and for repetitive use shall be made from this document

P. A.
AIR FORCE - 82
Other Cust
NAVY - AS
AIR FORCE - 99

INTERNATIONAL INTEREST

AIR FORCE-NAVY AERONAUTICAL STANDARD

ELBOW, PIPE TO HOSE, 90°

AN842

PROCUREMENT SPECIFICATION
MIL-F-5509

SUPERSEDES:

SHEET 2 OF 2

DD FORM 1 MAY 73 672-1 (COORDINATED)

PREVIOUS EDITIONS OF THIS FORM ARE OBSOLETE

PROJECT NO. 4730-0320