FED. SUP. CLASS
4730

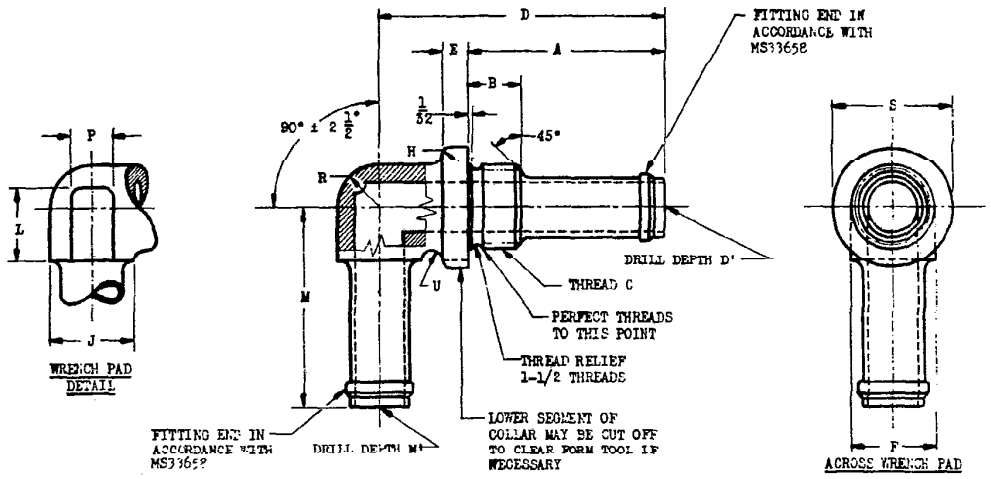

MATERIAL: COPPER ALLOY; ALUMINUM ALLOY; CORROSION RESISTANT STEEL (CRES); TITANIUM ALLOY; BARS, SHAPES, OR FORGINGS (SEE PROCUREMENT SPECIFICATION).
FINISH: SEE PROCUREMENT SPECIFICATION.
NO CODE LETTER IN PART NUMBER FOR COPPER ALLOY.
(11) ADD D AFTER DASH NUMBER FOR ALUMINUM ALLOY (EXCEPT 7075-T73).
~~ADD C AFTER DASH NUMBER FOR CRES, TYPE 302, 303, 304, 316, AND 321.~~
ADD J AFTER DASH NUMBER FOR CRES, TYPE 304.
ADD K AFTER DASH NUMBER FOR CRES, TYPE 316.
ADD S AFTER DASH NUMBER FOR CRES, TYPE ~~304L AND~~ 347. PARTS ARE NOT TO BE MANUFACTURED FROM TYPE 304L STEEL AFTER 10 FEBRUARY 1967.
ADD T AFTER DASH NUMBER FOR TITANIUM ALLOY.
(11) ADD W AFTER DASH NUMBER FOR 7075-T73 ALUMINUM ALLOY.
TITANIUM IS NOT RECOMMENDED FOR USE IN OXYGEN SYSTEMS.
(11) ITEMS CODED C ON PREVIOUS ISSUES OF THIS STANDARD ARE NO LONGER TO BE FURNISHED. PROCURING ACTIVITIES MUST SPECIFY APPLICABLE CRES MATERIAL CODE AS PART OF THE STANDARD PART NUMBER.
EXAMPLE OF PART NUMBERS:

AN848-6 - ELBOW, 3/8 ID HOSE, COPPER ALLOY.
(11) AN848-6D - ELBOW, 3/8 ID HOSE, ALUMINUM ALLOY (EXCEPT 7075-T73).
~~AN848-6C - ELBOW, 3/8 ID HOSE, CRES, TYPE 302, 303, 304, 316, OR 321.~~
AN848-6J - ELBOW, 3/8 ID HOSE, CRES, TYPE 304.
AN848-6K - ELBOW, 3/8 ID HOSE, CRES, TYPE 316.
AN848-6S - ELBOW, 3/8 ID HOSE, CRES, TYPE 347.
AN848-6T - ELBOW, 3/8 ID HOSE, TITANIUM ALLOY.
(11) AN848-6W - ELBOW, 3/8 ID HOSE, 7075-T73 ALUMINUM ALLOY.

BREAK ALL SHARP EDGES AND REMOVE ALL HANGING BURRS AND SLIVERS.
DIMENSIONS IN INCHES. UNLESS OTHERWISE SPECIFIED, TOLERANCES: FRACTIONS ±1/64, DECIMALS ±.005, ANGLES ±1/2°.
FOR DESIGN FEATURE PURPOSES, THIS STANDARD TAKES PRECEDENCE OVER PROCUREMENT DOCUMENTS REFERENCED HEREIN.
REFERENCED DOCUMENTS SHALL BE OF THE ISSUE IN EFFECT ON DATE OF INVITATIONS FOR BID.

(11) denotes changes

APPROVED 20 FEB 42 REVISED (19) 16 JUN 78 (17) 20 Mar 79

P.A. Air Force-99 Other Cust	International Interest	AIR FORCE-NAVY AERONAUTICAL STANDARD ELBOW, HOSE, 90°	AN848
Procurement Specification MIL-F-5509		SUPERSEDES:	PAGE 1 OF 2

DD FORM 1 SEP 67 672-1 (Coordinated) PREVIOUS EDITIONS OF THIS FORM ARE OBSOLETE.

4730-0969

User activities: Army - ME,AV Navy - AS Air Force - 99

Review activities: Army - ME,AV Navy - AS Air Force - 99 DLA-CS

This military standard is approved for use by all Departments and Agencies of the Department of Defense. Selection for all new engineering and design applications and for repetitive use shall be made from this document when applicable.

Infc

DASH NO.	HOSE ID	A	B	THREAD C (REF)	D +3/64 -0	D' +3/64 -0	E	F	H RAD	J DIA
4	1/4	1-15/16	7/16	7/16-20UNJF-3A	2-1/16	2-1/2	5/32	7/16	1/16	7/16
6	3/8	1-31/32	15/32	9/16-18UNJF-3A	2-5/8	2-43/64	3/16	9/16		9/16
8	1/2	2	1/2	3/4-16UNJF-3A	2-25/32	2-27/32	7/32	3/4	3/32	3/4
10	5/8	2-1/32	17/32	7/8-14UNJF-3A	2-31/32	3-3/32	1/4	7/8		7/8
12	3/4	2-1/16	9/16	1-1/16-12UNJ-3A	3-3/32	3-7/32		1-1/16		1-1/16
16	1			1-5/16-12UNJ-3A	3-7/32	3-11/32	9/32	1-5/16	1/8	1-5/16
20	1-1/4			1-5/8-12UNJ-3A	3-17/32	3-21/32		1-5/8		1-5/8
24	1-1/2			1-7/8-12UNJ-3A	3-21/32	3-25/32		1-7/8		1-7/8

DASH NO.	L APPROX	M +3/64 -0	M' +3/64 -0	P APPROX	R RAD	S DIA	U RAD	WEIGHT MAX (LBS.) COPPER ALLOY	AL ALLOY	CRES	TI ALLOY
4	5/16	1-25/32	1-53/64	1/4	7/32	5/8	1/16	.120	.040		
6	1/2	1-7/8	1-59/64	5/16	9/32	13/16	3/32	.180	.060		
8	3/8	1-31/32	2-1/32	7/16	3/8	1		.300	.100		
10	3/4	2-1/16	2-3/16		7/16	1-1/4	1/8	.390	.130		
12	15/16	2-5/32	2-9/32	1/2	17/32	1-7/16		.600	.200		
16	1	2-9/32	2-13/32	9/16	21/32	1-11/16		.870	.290		
20	1-1/4	2-1/2	2-5/8		13/16	2-1/16	3/16	1.500	.500		
24	1-1/2	2-5/8	2-3/4	5/8	15/16	2-3/8		2.100	.700		

APPROVED 20 FEB 42 REVISED (1) For changes see page 1. 20 MAR 79

User activities: Army - ME, AV
Navy - AS
Air Force -99

Review activities: Army - ME, AV
Navy - AS
Air Force -99
DLA-CS

This military standard is approved for use by all Departments and Agencies of the Department of Defense. Selection for all new engineering and design applications and for repetitive use shall be made from this document when applicable.

P.A. Air Force-99 Other Cust	International Interest	AIR FORCE - NAVY AERONAUTICAL STANDARD	AN848
		ELBOW, HOSE, 90°	
Procurement Specification MIL-F-5509		SUPERSEDES:	PAGE 2 OF 2

DD FORM 1 SEP 67 672-1 (Coordinated) PREVIOUS EDITIONS OF THIS FORM ARE OBSOLETE.