This military standard is approved for use by all Departments and Agencies of the Department of Defense. Selection for all new engineering and design applications and for repetitive use shall be made from this document

REVIEWER ACTIVITIES:

USER ACTIVITIES:

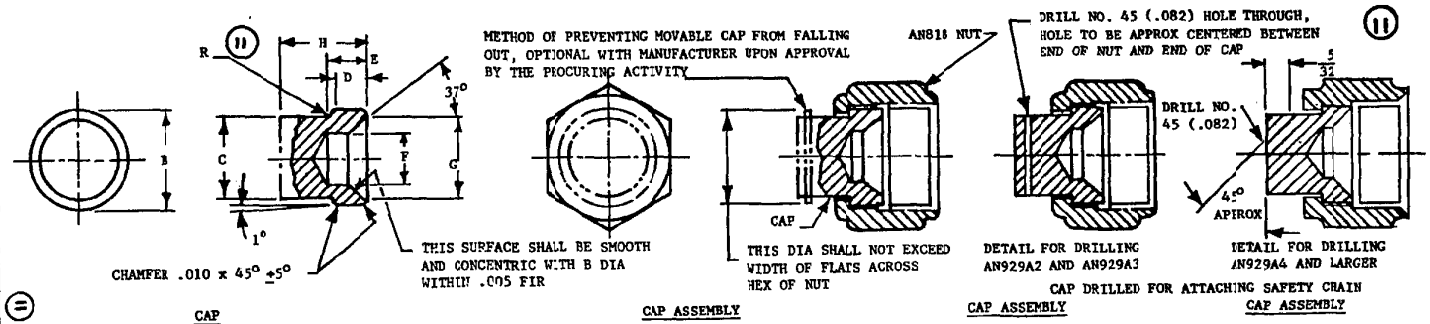

CAP

CAP ASSEMBLY

CAP ASSEMBLY

CAP ASSEMBLY

(11) DENOTES CHANGES

DASH NO.	TUBING OD	B +.000 -.003 DIA	C DIA	D	E	F DIA	G +.000 -.005 DIA	H	R RAD
2	1/8	.263	5/32	5/32	1/8	3/32	.218	17/32	.005
3	3/16	.325	7/32	7/32		5/32	.250		
4	1/4	.378	9/32	13/64		11/64	.300		
5	5/16	.441	11/32	7/32	9/64	15/64	.360	9/16	
6	3/8	.503	27/64	17/64	5/32	19/64	.440	5/8	.010
8	1/2	.683	35/64	5/16	11/64	25/64	.575	3/4	
10	5/8	.799	43/64	9/32	1/4	7/16	.585		
12	3/4	.974	13/16			9/16	.885	7/8	
16	1	1.224	1-1/16	19/64	5/16	13/16	1.103		
20	1-1/4	1.536	1-21/64	3/8		1-5/64	1.413	1	
24	1-1/2	1.786	1-13/32	13/32	3/8	1-5/16	1.661	1-1/8	
28	1-3/4	2.161	1-7/8	1/2		1-35/64	2.034	1-3/8	.015
32	2	2.411	2-9/64	37/64	1/2	1-25/32	2.284	1-7/16	
40	2-1/2	2.911	2-41/64	5/8	11/16	2	2.784	1-3/4	
48	3	3.411	3-5/32	11/16		2-1/2	3.284	1-13/16	

APPROVED 7 NOV 44 REVISED (10) 21 MAR 79 (11) 23 MAR 83

FED. SUP CLASS 4730

MILITARY STANDARD

AN929

SHEET 1 OF 2

TITLE

CAP ASSEMBLY, PRESSURE SEAL FLARED TUBE FITTING

INTERNATIONAL INTEREST

Air Force - 82
Other Cust

AIR FORCE - 99

PROCUREMENT SPECIFICATION MIL-T-5509

SUPERSEDES: AN 929

DD FORM 1 MAY 73 672-1 (COORDINATED)

PREVIOUS EDITIONS OF THIS FORM ARE OBSOLETE

PROJECT 4730-F453

FED. SUP CLASS
4730

(11) AN929 AND AN929A ASSEMBLIES WHICH CONSIST OF A CAP AND AN "AN818" NUT, SHALL BE FASTENED TOGETHER FOR SHIPPING OR STOCK PURPOSES IN A MANNER ACCEPTABLE TO THE PROCURING ACTIVITY.

MATERIAL OF CAP: ALUMINUM ALLOY: CORROSION RESISTANT STEEL (CRES); TITANIUM ALLOY: BARS, SHAPES, OR FORGINGS. SEE PROCUREMENT SPECIFICATION.

FINISH: SEE PROCUREMENT SPECIFICATION.

NO CODE LETTER AFTER DASH NUMBER DENOTES ASSEMBLY OF ALUMINUM ALLOY CAP (EXCEPT 7075-T73) AND ALUMINUM ALLOY NUT (EXCEPT 7075-T73), AN 818-D.

ADD J AFTER DASH NUMBER FOR ASSEMBLY OF CRES CAP (TYPE 304) AND CRES NUT, AN818 (TYPE 304 OR 316).

ADD K AFTER DASH NUMBER FOR ASSEMBLY OF CRES CAP (TYPE 316) AND CRES NUT, AN818 (TYPE 304 OR 316).

ADD S AFTER DASH NUMBER FOR ASSEMBLY OF CRES CAP (TYPE 347) AND CRES NUT, AN818 (TYPE 304 OR 316). CAPS ARE NOT TO BE MANUFACTURED FROM TYPE 304L STEEL AFTER 10 FEBRUARY 1967.

ADD T AFTER DASH NUMBER FOR ASSEMBLY OF TITANIUM ALLOY CAP AND NUT, AN818-T.
ADD W AFTER DASH NUMBER FOR ASSEMBLY OF 7075-T73 ALUMINUM ALLOY CAP AND NUT, AN818-W.
ADD A IN PLACE OF DASH FOR ASSEMBLY WITH CAP DRILLED FOR ATTACHMENT OF SAFETY CHAIN.
TITANIUM IS NOT RECOMMENDED FOR USE IN OXYGEN SYSTEMS.
(11) ADD L BEFORE DASH NUMBER FOR INCLUSION OF LOCKWIRE HOLES IN AN818 NUT.

EXAMPLE OF PART NUMBERS:

AN929-8 - CAP ASSEMBLY, 1/2 TUBING, ALUMINUM ALLOY (EXCEPT 7075-T73).
AN929-8J - CAP ASSEMBLY, 1/2 TUBING, CRES CAP (TYPE 304) AND CRES NUT, AN818-J OR -K.
AN929-8K - CAP ASSEMBLY, 1/2 TUBING, CRES CAP (TYPE 316) AND AN818-J OR -K NUT.
AN929A8S - CAP ASSEMBLY, 1/2 TUBING, CRES CAP (TYPE 347), DRILLED FOR ATTACHMENT OF SAFETY CHAIN, AND AN818-J OR -K NUT.
AN929-8T - CAP ASSEMBLY, 1/2 TUBING, TITANIUM ALLOY CAP AND AN818-T NUT.
AN929-8W - CAP ASSEMBLY, 1/2 TUBING, 7075-T73 ALUMINUM ALLOY.
(11) AN929-L4J - CAP ASSEMBLY, 1/4 INCH TUBING, CRES CAP (TYPE 304) AND CRES NUT AN818-L4J (DRILLED FOR LOCKWIRE).

FOR DESIGN FEATURE PURPOSES, THIS STANDARD TAKES PRECEDENCE OVER PROCUREMENT DOCUMENTS REFERENCED HEREIN.

REFERENCED DOCUMENTS SHALL BE OF THE ISSUE IN EFFECT ON DATE OF INVITATIONS FOR BID.

APPROVED 7 NOV 44 REVISED (10) 21 MAR 79 (11) 23 MAR 83

USER ACTIVITIES:

REVIEWER ACTIVITIES:

This military standard is approved for use by all Departments and Agencies of the Department of Defense. Selection for all new engineering and design applications and for repetitive use shall be made from this document

P. A. Air Force - 82 Other Cust AIR FORCE - 99	INTERNATIONAL INTEREST	TITLE CAP ASSEMBLY, PRESSURE SEAL FLARED TUBE FITTING	MILITARY STANDARD AN929
PROCUREMENT SPECIFICATION MIL-F-5509	SUPERSEDES: AN820		SHEET 2 OF 2

DD FORM 1 MAY 73 672-1 (COORDINATED)

PREVIOUS EDITIONS OF THIS FORM ARE OBSOLETE