This military standard is approved for use by all Departments and Agencies of the Department of Defense. Selection for all new engineering and design application and for repetitive use shall be made from this document.

Review activities:
DSA – CS

User activities:

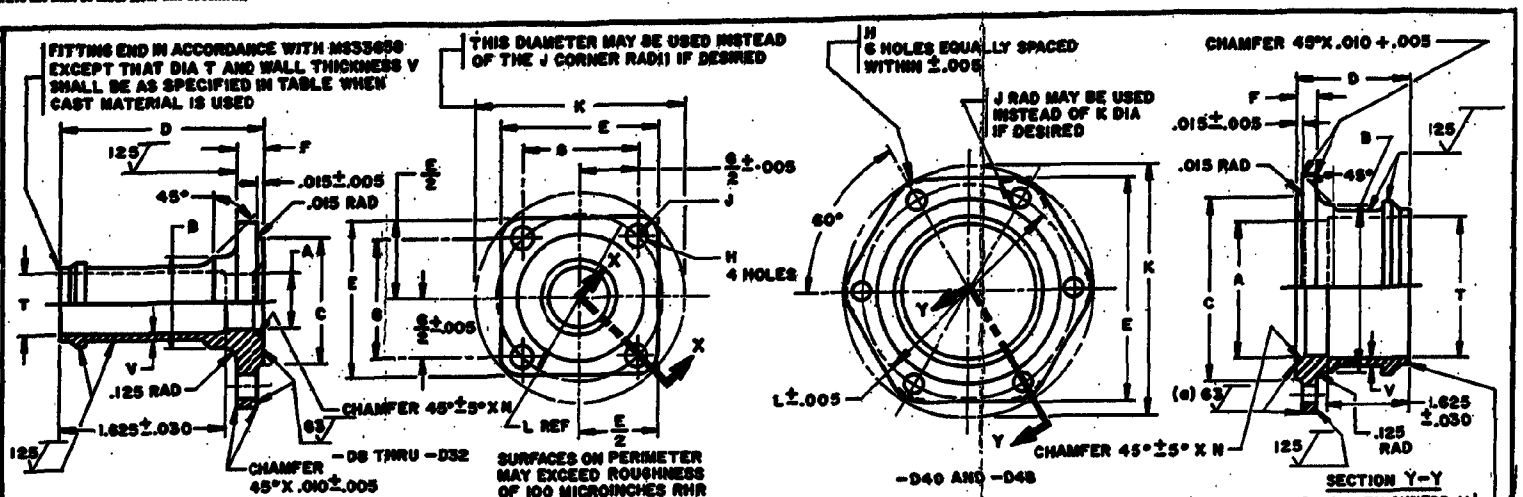

DASH NO.	HOSE ID	A ±.003 DIA	B +.000 −.015 DIA	C DIA ±.010	D	E		F ±.005	G ±.005	H +.010 −.000 DIA	J RAD ±.010	K DIA ±.010	L DIA	N DIA	T MIN DIA	V MIN	WEIGHT MAX
-D6	.500			.875		1.390			.950			1.782	1.344				
-D10	.625			1.000		1.468			1.038			1.906	1.468				
-D12				1.250		1.594	±.016	.250	1.156	.206	.219	2.094	1.635	.669	.609		.08
-D12-16	.750	.809	.891		2.000							2.312	1.855			.065	.09
-D16	1.000	.944	1.156	1.500		1.750			1.312					.904	.859		.10
-D20	1.250	1.078	1.438	1.844	2.062	2.188			1.656	.266	.266	2.875	2.242	1.138	1.059	.090	.16
-D20-24				2.125	2.125	2.375	±.020	.312	1.812		.281	3.094	2.562				.21
-D24	1.500	1.312	1.688											1.372	1.309		.22
-D32	2.000	1.781	2.250	2.750	2.188	3.000			2.375	.328	.312	3.953	3.359	1.841	1.793	.100	.34
-D40	2.500	2.281	2.812	3.281		4.000					.375	4.500	3.812	2.341	2.243		.49
-D48	3.000	2.781	3.344	3.781		4.500					.625	5.000	4.312	2.841	2.793		.58

(a) ANNULAR TOOL MARKS UP TO 63 RHR MAX WILL BE ALLOWED.
REDUCTION BY FORGING DRAFT ANGLE OF 7° MAXIMUM IS PERMISSIBLE.
POROSITY TEST: FINISHED CASTINGS SHALL NOT LEAK WHEN SUBJECTED TO 100-PSI INTERNAL AIR PRESSURE AND SUBMERGED IN WATER FOR 3 MINUTES MINIMUM.
FOR HOSE SIZES THRU 1 INCH: MAXIMUM OPERATING TEMPERATURE 275°F, MAXIMUM PRESSURE 500 PSI.
FOR HOSE SIZES EXCEEDING 1 INCH: MAXIMUM OPERATING TEMPERATURE 275°F, MAXIMUM PRESSURE 1500 PSI.
MATERIAL: ALUMINUM-ALLOY FORGING, QQ-A-367, CLASS V OR L. OPTIONAL MATERIAL: PERMANENT MOLD ALUMINUM-ALLOY CASTING, QQ-A-596.
ALUMINUM-ALLOY BAR STOCK, QQ-A-225/6, CONDITION T4.
UNLESS OTHERWISE SPECIFIED, SURFACE ROUGHNESS SHALL NOT EXCEED 100 MICROINCHES RHR. SEE STANDARD ASA B46.1.
FINISH: ALUMINUM-ALLOY, ANODIZE, MIL-A-8625, TYPE 2, DYE LIGHT BLUE.
FITTINGS SHALL BE PERMANENTLY MARKED WITH MS PART NUMBERS ON AN UNFINISHED SURFACE.
FOR NOMINAL USE ON FUEL AND OIL SYSTEMS.
BREAK ALL SHARP EDGES AND REMOVE ALL HANGING BURRS OR SLIVERS WHICH MIGHT BECOME DISLODGED UNDER USAGE.
DIMENSIONS IN INCHES: UNLESS OTHERWISE SPECIFIED, TOLERANCES: DECIMALS ± .005, ANGLES ± 1/2°.
THIS STANDARD TAKES PRECEDENCE OVER DOCUMENTS REFERENCED HEREIN.
REFERENCED DOCUMENTS SHALL BE OF THE ISSUE IN EFFECT ON DATE OF INVITATIONS FOR BID.

(B)

FED. SUP CLASS 4730

APPROVED 9 AUG 57 REVISED (A) 1 APR 59 (B) 24 JUL 75

P.A. AIR FORCE – 82
Other Cust NAVY – AS

PROCUREMENT SPECIFICATION: MIL-F-5509

SUPERSEDES: AN757

TITLE: CONNECTOR, FIXED FLANGE, TO HOSE

MILITARY STANDARD

MS 20757

SHEET 1 OF 1

DD FORM 1 SEP 66 672-1 (Coordinated). PREVIOUS EDITIONS OF THIS FORM ARE OBSOLETE.