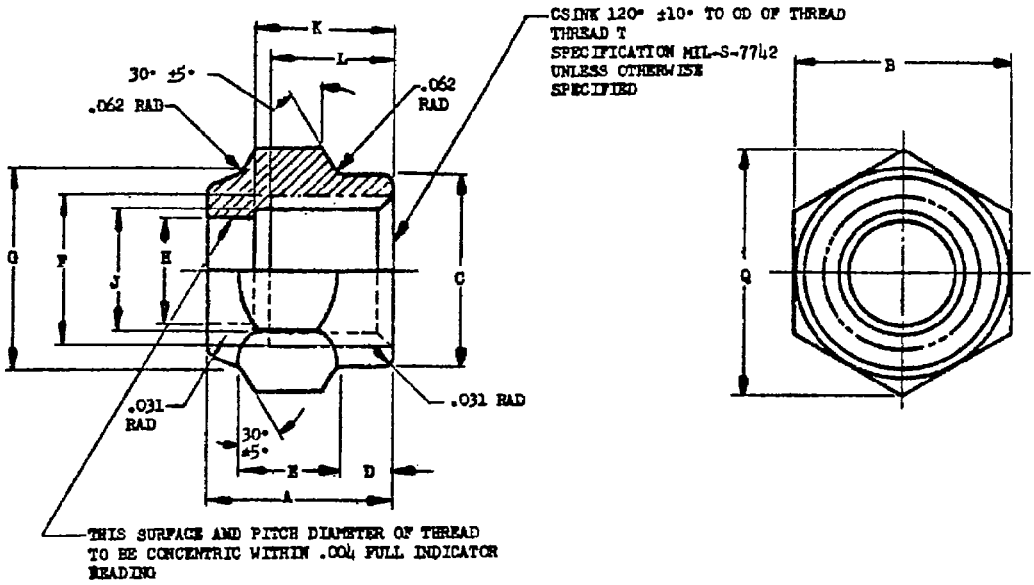

DASH NO. BRASS	DASH NO. CORRES STL	TUBE DIA	THREAD T	(7) A ±.015	B	C DIA	(7) D REF	(7) E ±.015	F DIA	G DIA	H +.004 -.000 DIA	J DIA	K	L	P PITCH DIA	Q REF	WEIGHT MAX BRASS	WEIGHT MAX CORRES STL
2	C2	.125	5/16-32 REF-3B	.438	.375 +.003 -.004	(d) .375		.344	.312	.375	.173	.279 +.004 -.000	.281	.234		.43		
3	C3	.188	3/8 -24 UNF-3B	.500	.438 +.003 -.004	(d) .438		.406	.375	.438	.257	.330 +.006 -.000	.328	.281		.51		
4	C4	.250	7/16-20 UNF-3B	.500	.562 ±.004	.531	.156	.250	.438	.500	.316	.385 +.005 -.000	.375	.312		.65		
5	C5	.312	1/2 -20 UNF-3B	.531	.625 ±.004	.594		.281	.531	.594	.379	.447 +.006 -.000	.406	.344		.72		
6	C6	.375	5/8 -18 UNF-3B	.562	.750 ±.004	.719	.188		.625	.719	.473	.565 +.008 -.000	.438	.375		.87		
8	C8	.500	3/4 -16 UNF-3B	.688	.875 ±.004	.844	.219	.344	.750	.875	.598	.682 +.008 -.000	.531	.438		1.01		
10	C10	.625	15/16-14 NS-3	.812	1.062 ±.005	1.062	.250	.438	.938	1.062	.719	.648 +.004 -.000	.625	.531	.8911 +.0036 -.0000	1.23		
12		.750	1-1/8 -12 UNF-3B	.875	1.250 ±.005	1.250		.531	1.062	1.250	.863	1.305 +.009 -.000	.719	.625		1.44		
16		1.000	1-1/2 -12 UNF-3B	1.000	1.750 ±.016	1.688	.312	.562	1.500	1.750	1.140	1.410 +.009 -.000	.750			2.02		

(a) INACTIVE FOR DESIGN AFTER 23 NOVEMBER 1942.
(b) INACTIVE FOR DESIGN AFTER 9 MAY 1947 EXCEPT FOR OXYGEN SYSTEMS AND ENGINE PRIMER LINES.
(c) DASH NO. 5, 6, 8, 10, ARE NOT TO BE USED ON ENGINE PRIMER LINES.
(d) DIAMETER OF 30° CHAMFER AT END.

MATERIAL: BRASS; BARS, SHAPES, OR FORGINGS.
CORROSION-RESISTANT STEEL; BARS, SHAPES, OR FORGINGS.
SEE PROCUREMENT SPECIFICATION.

FINISH: SEE PROCUREMENT SPECIFICATION.

ADD P BEFORE DASH NO. FOR CADMIUM-PLATED BRASS NUT.

EXAMPLES OF PART NO.: AN805-4 = NUT-UNION, BRASS FOR .250 (4/16) TUBING OD.
AN805P4 = NUT-UNION, BRASS, CADMIUM PLATED FOR .250 (4/16) TUBING OD.
AN805C4 = NUT-UNION, CORROSION-RESISTANT STEEL FOR .250 (4/16) TUBING OD.

BREAK ALL SHARP EDGES AND REMOVE ALL HANGING BURRS AND SLIVERS WHICH MIGHT BECOME DISLODGED UNDER USAGE.

DIMENSIONS IN INCHES. UNLESS OTHERWISE SPECIFIED, TOLERANCES: DECIMALS ±.005, ANGLES ±1/2°.

FOR DEFINITION AND APPLICATION OF DRAWING STATUS NOTES, SEE ANA BULLETIN NO. 337.

APPROVED 23 Nov 42 REVISED (1) 8 Jan 43 (2) 30 Mar 43 (3) 9 May 47 (4) 9 Jun 50 (5) 1 Jun 54 (6) 1 Sep 55 (7) 14 Aug 56

PROCUREMENT SPECIFICATION	AIR FORCE-NAVY AERONAUTICAL STANDARD	AN805
MIL-F-6001	NUT, UNION	