| INCH-POUND |

MIL-H-28693(YD)
29 March 1993

MILITARY SPECIFICATION

HOSE, RUBBER, OIL AND GASOLINE DISCHARGE, SMOOTH BORE, LIGHTWEIGHT BUOYANT TYPE, LONGITUDINALLY REINFORCED, 6 INCH

This specification is approved for use by the Naval Facilities Engineering Command, Department of the Navy, and is available for use by all Departments and Agencies of the Department of Defense.

1. SCOPE

1.1 Scope. This specification covers a 6-inch, lightweight, smooth bore, longitudinally reinforced oil and gasoline discharge rubber hose, furnished with couplings and a hose support ring. The system is intended for use as part of a buoyant fueling system. The maximum working pressure of this hose is 150 pound-force per square inch (psi).

2. APPLICABLE DOCUMENTS

2.1 Government documents.

2.1.1 Specifications and standards. The following specifications and standards form a part of this document to the extent specified herein. Unless otherwise specified, the issues of these documents are those listed in the issue of the Department of Defense Index of Specifications and Standards (DODISS) and supplement thereto, cited in the solicitation (see 6.2).

SPECIFICATIONS

MILITARY

MIL-H-775 - Hose, Hose Assemblies: Rubber, Plastic, Fabric or Metal (Including Tubing) and Associated Hardware: Packaging of.

Beneficial comments (recommendations, additions, deletions) and any pertinent data which may be of use in improving this document should be addressed to: Commanding Officer (Code 156), Naval Construction Battalion Center, 621 Pleasant Valley Road, Port Hueneme, CA 93043-4300, by using the Standardization Document Improvement Proposal (DD Form 1426) appearing at the end of this document or by letter.

AMSC N/A FSC 4720

DISTRIBUTION STATEMENT A. Approved for public release; distribution is unlimited.

MIL-C-24356 - Coupling, Segmented and Split Clamps, Reattachable, 2-1/2, 4-, 6-, and 7-inch, for Refueling-at-Sea-Hose.

STANDARDS

FEDERAL

FED-STD-162 - Hose, Rubber, Visual Inspection Guide for.
FED-STD-601 - Rubber, Sampling and Testing.

MILITARY

MIL-STD-105 - Sampling Procedures and Tables for Inspection by Attributes.

2.1.2 Other Government documents. The following other Government documents, form a part of this specification to the extent specified herein. Unless otherwise specified, the issues shall be those in effect on the date of the solicitation.

CODE OF FEDERAL REGULATIONS (CFR)

21 CFR 177 - Indirect Food Additives: Polymers.

(Application for copies should be addressed to the Superintendent of Documents, U.S. Government Printing Office, Washington, DC 20402.)

(Copies of specifications, standards, drawings, publications, and other Government documents required by contractors in connection with specific acquisition functions should be obtained from the contracting activity or as directed by the contracting activity.)

2.2 Non-Government publications. The following document(s) form a part of this document to the extent specified herein. Unless otherwise specified, the issues of the documents which are DoD adopted are those listed in the issue of the DODISS cited in the solicitation. Unless otherwise specified, the issues of documents not listed in the DODISS are the issues of the documents which are current on the date of the solicitation (see 6.2).

ASTM

ASTM A153 - Zinc Coating (Hot-Dip) on Iron and Steel Hardware.
ASTM A572 - High-Strength Low-Alloy Columbium-Vanadium Steels of Structural Quality.
ASTM D297 - Rubber Products-Chemical Analysis.
ASTM D380 - Testing Rubber Hose.
ASTM D381 - Existent Gum in Fuels by Jet Evaporation.
ASTM D412 - Rubber Properties in Tension.
ASTM D413 - Rubber Property-Adhesion to Flexible Substrate.
ASTM D471 - Rubber Property-Effect of Liquids.
ASTM D518 - Rubber Deterioration-Surface Cracking.
ASTM D573 - Rubber Deterioration in an Air Oven.
ASTM D1149 - Rubber-Deterioration-Surface Ozone Cracking in a Chamber.

(Application for copies should be addressed to the ASTM, 1916 Race Street, Philadelphia, PA 19013.)

(Non-Government standards and other publications are normally available from the organizations which prepare or which distribute the documents. These documents also may be available in or through libraries or other informational services.)

2.3 Order of precedence. In the event of a conflict between the text of this specification and the references cited herein (except for associated detail specifications, specification sheets or MS standards), the text of this specification shall take precedence. Nothing in this specification however, shall supersede applicable laws and regulations unless a specific exemption has been obtained.

3. REQUIREMENTS

3.1 First article. When specified in the contract or purchase order, a complete hose assembly shall be subjected to first article inspection (see 4.2.1 and 6.2).

3.2 Drawings. Drawings forming a part of this specification are engineer design drawings. The contractor is responsible for preparing his own shop drawings. Where tolerances provided could cumulatively result in incorrect fits, the contractor shall provide tolerances within those prescribed on the drawings to insure correct fit, assembly, and operation of the items. No deviation from the prescribed dimensions or tolerances is permissible without prior approval of the contracting officer.

3.3 Materials. Materials shall be as specified herein and in applicable specifications and standards, and other referenced documents. Materials not specified shall be selected by the contractor and shall be subject to all provisions of this specification. Materials shall be free of defects which adversely affect performance or serviceability of the finished product.

3.3.1 Rubber. Rubber used in the hose shall conform to the requirements listed in table I, when tested as specified in the appropriate paragraph referenced therein. Ester based polyurethane shall not be an acceptable material. The inner tube material shall conform to the Code of Federal Regulations 21 CFR 177.2600.

3.4 Construction. The hose shall have a rubber tube, reinforcement consisting of either braided synthetic fiber yarn or multiple plies of synthetic fiber fabric held together with rubber friction, and a rubber cover. The hose shall have longitudinal reinforcement of synthetic fiber cord incorporated into the hose carcass and extending the length of the hose. Both ends of the hose shall be cut square.

3.5 Dimensions. The length of the hose shall be 100 ±1 foot. The inside diameter (id) shall be 6 +0.125 -0.000 inches. The last 12 inches of each end of the hose shall have a wall thickness of 0.422 ±0.047 inches to assure secure attachment of the hose couplings to the hose. If the normal hose wall thickness does not meet this requirement, the ends shall be built up to the required thickness. The transition to the required thickness shall be tapered. Hose

ends shall be compatible with the couplings specified in MIL-C-24356. The tube thickness shall be 0.094-inch minimum and the cover thickness shall be 0.078-inch minimum when measured in accordance with 4.5.1.3.

TABLE I. Requirements for rubber used in hose.

	Tube	Cover	Friction	Test paragraph
Initial properties:				
Tensile strength psi, minimum	2300	1600		4.5.9.1
Ultimate elongation, percent, minimum	300	350		4.5.9.1
Adhesion, psi, minimum	30	30	30	4.5.9.5
Properties after immersion in test fluid:				
Tensile strength, psi, minimum	1400	800		4.5.9.2
Ultimate elongation, percent, minimum	200	200		4.5.9.2
Volume increase, percent, maximum (no shrinkage permitted)	30	30	30	4.5.9.4
Adhesion, psi, minimum	20	20	20	4.5.9.6
Properties after oven aging:				
Tensile strength, psi minimum	2000	1450		4.5.9.3
Ultimate elongation, percent, minimum	250	250		4.5.9.3
Nonvolatile extract from tube, percent, maximum	3.0			4.5.9.7
Phosphate plasticizer in tube, qualitative determination	Absent			4.5.9.8
Resistance of cover to ozone	No cracking			4.5.9.9
Low temperature bend	No cracking			4.5.9.10

3.6 Weight. The unit weight of the hose, without couplings, shall be not more than 4.0 pounds (lb) per foot when measured in accordance with 4.5.2.

3.7 Hydrostatic pressure. The hose shall withstand a proof pressure of 300 pound-force per square inch gage (psig) without leakage or other indication of weakness when tested according to 4.5.3. The hose shall not burst at a pressure less than 600 psig when tested in accordance with 4.5.6.

3.8 Dimensional stability. When tested in accordance with 4.5.4, the hose shall not increase in length more than 15 percent nor increase in outside diameter (od) more than 18 percent, nor shall the twist be more than 0.5 degree (^{o}) per foot while under the proof pressure. The hose shall not retain more than 5 percent change in length or 3 percent change in od after releasing the pressure. All calculations shall be based on the original dimensions of the hose.

3.9 Tensile pull. The hose shall be capable of withstanding a tensile pull of 12,000 lb for 5 minutes, and shall have a breaking tensile of not less

than 16,000 lb when tested in accordance with 4.5.7. At the 12,000 lb tensile pull there shall be no apparent damage to the hose or weakening of the coupling grips.

3.9.1. Elongation. The hose shall have an elongation of not more than 10 percent when loaded to 6,000 lb in accordance with 4.5.7.

3.10 Flexibility. The hose shall have sufficient flexibility to collapse to 2-1/2 inches in cross-sectional height, under an applied load of 100 lb, when tested as described in 4.5.8. The specimen may be tested in any convenient orientation which conforms to the requirements of 4.5.8.

3.11 Couplings and fittings. Each of the hoses shall be equipped with couplings conforming to MIL-C-24356, size 6-inch, except: (1) Dimension J in figure 1 shall be 5.600 minimum and dimensions L and M in figure 1 shall be L = 1.72 inches and M = 1.87 inches to assure clearance for installation of hose support ring and (2) Material composition for end coupling body and nipple shall be wrought aluminum alloy (6061-T6). One coupling on each hose shall be the male type, the other coupling on each hose shall be the female type.

3.12 Split clamp and band assembly. One 6-inch split clamp and band assembly conforming to MIL-C-24356, consisting of "O" ring, two split clamp halves, one band and all necessary screws shall be provided with each length of hose.

3.13 Hose support ring (RHS-6). One hose support ring (RHS-6), conforming to figure 1, shall be provided per 100 foot section of hose for installation as shown therein. The inner diameter of the hose support ring shall not change greater than 5 percent with a load of 6,000 lb when tested in accordance with 4.5.10.

3.14 Branding and marking.

3.14.1 Hose branding. Each length of hose shall be branded in letters at least 1/4-inch high inlaid in the cover and vulcanized thereto about 5 feet from each end. The branding shall include the following:

a. Supplier's name and/or trademark.
b. Month and year of manufacture.
c. Oil, gasoline, longitudinally reinforced, 150 psi.
d. NSN 4720-LL-LCA-0057.

3.14.2 Hose striping. Each length of hose shall be marked with longitudinal white or red stripes along its entire length to show the natural relaxed position of the hose. The stripes shall be a white or red rubber compound securely vulcanized to the outer cover of the hose. The stripes shall be spaced 180° apart around the circumference of the hose and run the entire length of the hose. If the longitudinal reinforcement of the hose consists of two synthetic fiber straps, the stripes shall be placed over the straps to indicate their location in the hose.

3.15 Workmanship.

3.15.1 Hose. The exterior surface of the hose shall have no more total visual defects than are allowed by 4.3.1 when examined in accordance with 4.4. The hose shall exhibit no blisters or other evidence of disruption on its interior and exterior surfaces after the air pressure test specified in 4.5.5.

3.15.2 Castings. All castings shall be sound and free from patching, misplaced coring, warping, or any other defect which reduces capability of casting to perform the intended function.

3.16 Interchangeability. All units of the same classification furnished with similar options under a specific contract shall be identical to the extent necessary to insure interchangeability of component parts, assemblies, accessories, and spare parts.

4. QUALITY ASSURANCE PROVISIONS

4.1 Responsibility for inspection. Unless otherwise specified in the contract or purchase order, the contractor is responsible for the performance of all inspection requirements as specified herein. Except as otherwise specified in the contract or purchase order, the contractor may use his own or any other facilities suitable for the performance of the inspection requirements specified herein, unless disapproved by the Government. The Government reserves the right to perform any of the inspections set forth in the specification where such inspections are deemed necessary to assure supplies and services conform to prescribed requirements.

4.1.1 Responsibility for compliance. All items must meet all requirements of section 3. The inspection set forth in this specification shall become a part of the contractor's overall inspection system or quality program. The absence of any inspection requirements in the specification shall not relieve the contractor of the responsibility of assuring that all products or supplies submitted to the Government for acceptance comply with all requirements of the contract. Sampling in quality conformance does not authorize submission of known defective material, either indicated or actual, nor does it commit the Government to acceptance of defective material.

4.1.2 Component and material inspection. Components and materials shall be inspected in accordance with all the requirements specified herein and in applicable referenced documents.

4.2 Classification of inspections. The inspection requirements specified herein are classified as follows:

a. First article inspection (see 4.2.1).
b. Quality conformance inspection (see 4.2.2).

4.2.1 First article inspection. The first article inspection shall be performed on a complete hose assembly. This inspection shall include the examination of 4.4 and the tests of 4.5. The first article may be either a first production item or a standard production item from the supplier's current inventory provided the item meets the requirements of the specification and is representative of the design, construction, and manufacturing technique applicable to the remaining items to be furnished under the contract. In addition to the first article the following shall be submitted: A 36-inch

length of hose for the burst test; a 12-inch length of hose for the flexibility test; a 12-inch length of hose for the tensile pull and elongation test, and a 6 by 6-inch sample of friction for the friction swelling test.

4.2.2 Quality conformance inspection. The quality conformance inspection shall include the examination of 4.4, the tests of 4.5, and the packaging inspection of 4.6. This inspection shall be performed on the samples selected in accordance with 4.3.

4.3 Sampling. Sampling and inspection procedures shall be in accordance with MIL-STD-105. The unit of product shall be one complete hose assembly. All hose assemblies offered for delivery at one time shall be considered a lot for the purpose of inspection.

4.3.1 Sampling for examination. Guidance for sampling procedures is provided in 6.5.1.

4.3.2 Sampling for tests. Guidance for sampling procedures is provided in 6.5.2.

4.3.2.1 Sample for flexibility test. A 12-inch length of hose identical to the hose submitted for the lot shall be submitted for the flexibility test specified in 4.5.8.

4.3.2.2 Sampling for destructive tests. A 36-inch length of hose identical to the hose submitted for the lot shall be submitted for the burst test specified in 4.5.6. At the completion of the burst test, additional tests shall be conducted as specified in 4.5.1.3 and 4.5.9 on an undamaged section of the 36-inch sample of the hose submitted for the burst test.

4.3.2.3 Sample for tensile pull and elongation test. A section of hose not less than 12 inches in length identical to the hose submitted for the lot shall be submitted for the tensile pull and elongation test specified in 4.5.7.

4.3.2.4 Sampling for proof pressure test. Every hose in the lot shall be subjected to the nondestructive proof pressure test (see 4.5.3).

4.3.2.5 Sampling for friction swelling test. A vulcanized sample of the rubber friction used to impregnate the fabric reinforcement shall be provided for the friction swelling test (see 4.5.9.4). The sample shall be 6 inches by 6 inches by 0.080 $\pm$0.010 inch, and shall have the same composition as the friction used in the hose and an equivalent cure.

4.4 Examination. Each sample hose assembly selected shall be visually and dimensionally examined to determine conformance with all the requirements of this specification not involving tests. The classification of defects in FED-STD-162 shall be used to determine and evaluate defects through visual inspection.

4.5 Tests. Sample hose sections selected shall be subjected to the applicable tests specified in 4.5.1 through 4.5.10.

4.5.1 Dimensions.

4.5.1.1 Length. Hose selected shall be measured for length as specified in ASTM D380 to determine conformance to 3.5.

4.5.1.2 Inside diameter. Hose selected shall have the id measured as specified in ASTM D380 to determine conformance to 3.5.

4.5.1.3 Tube and cover thickness. The thickness of the tube and cover shall be measured on specimens removed from each end of the hose section obtained in accordance with 4.3.2.2 to determine conformance to 3.5. The thickness shall be determined by the procedure given in ASTM D380, except that only buffed specimens shall be measured. The respective values found for the tube thickness shall not be averaged, but shall be regarded as independent measurements, each of which should meet the requirement. The respective values for the cover thicknesses shall be treated in the same manner.

4.5.1.4 Wall thickness. The wall thicknesses of all hoses in the sampling shall be measured at both ends using a deep throat micrometer to determine conformance to 3.5. The measurements shall be made at least every 90° around the circumference at points 2, 8, and 12 inches in from the ends of the hoses. The entire lot shall be rejected if the wall thickness of any hose in the sampling is more than 0.016 inch above the maximum given in 3.5. The lot shall be accepted if the wall thickness of any hose in the sampling is above the maximum tolerance providing that:

a. The excess above the maximum tolerance is no more than 0.016 inch.
b. The excess thickness prevails over not more than 25 percent of the applicable circumference.
c. An equal or greater proportion of the applicable circumference has a wall thickness at least 0.016 inch under the maximum tolerance.

4.5.2 Unit weight. The unit weight of all hoses in the sampling shall be determined by weighing the hoses without couplings. The readings shall be accurate to the closest pound. The weight of each hose shall be divided by its length to determine conformance to 3.6. The entire lot shall be rejected if any sample hose fails to meet the requirement for unit weight.

4.5.3 Proof pressure. Each length of hose shall be equipped with couplings and subjected to 300 psig proof pressure to determine conformance to 3.7. Before starting the tests, a 10-lb hydrostatic pressure shall be established in the hose, and the length of od, and zero index for the twist (see 4.5.4). The method shall be as described in ASTM D380 except that the hydrostatic pressure rate shall not exceed 1,000 psig per minute. The proof pressure shall be held for 5 minutes and the hose and fittings examined for leakage or other indication of weakness. At the end of the 5-minute period and while the pressure is maintained, the length, od, and twist of the hose shall be measured for the determination of dimensional stability. Failure of any hose to meet the requirements for proof pressure shall be cause for rejection of the entire lot.

4.5.4 Dimensional stability. The effect of the proof test pressure on the length, od and twist of all hoses in the sampling shall be determined as specified in 4.5.3 and ASTM D380. The pressure shall then be reduced to "0" psig and hose left in this condition for 5 minutes. At the end of this period,

the diameter and length of the hose shall be measured to determine conformance to 3.8. The entire lot shall be rejected if any hose sample fails to meet the requirements for dimensional stability.

4.5.5 Air pressure test. Each of the hoses in the sampling shall be subjected to 125 ±5 psig air or nitrogen pressure for not less than 10 minutes, followed by a complete release of pressure within 15 seconds. The outside and inside surfaces of the hose shall then be examined within 5 minutes for blisters or other evidence of disruption. The inside of the hose shall be inspected by sighting from one end of the straight hose while a light is held at the other end of the hose. This test shall be performed after the hose has been equipped with couplings (see 3.11) to determine conformance to 3.15.1. (Suitable precautions shall be taken to protect the operators from injury during the test in case the couplings are blown off or the hose ruptures). The entire lot shall be rejected if any sample hose fails to meet the requirements for air pressure.

4.5.6 Burst pressure. A section of the hose obtained in accordance with 4.3.2.2 shall be equipped with couplings and the burst pressure of this section in the straight condition shall then be determined in accordance with ASTM D380 to determine conformance to 3.7.

4.5.7 Tensile pull and elongation. The hose section obtained in accordance with 4.3.2.3 shall be equipped, on each end, with couplings conforming to MIL-C-24356. The ends of the couplings on the hose shall be adapted for testing in tension in a universal testing machine. Two bench marks, 1 inch apart and 5-1/2 inches from each end of the hose between couplings, shall be marked on the outside (cover) for measuring elongation. The section of hose with couplings shall be subjected to a tensile load of 6,000 lb in the axial direction and held at that load while the increase in distance between the bench marks is marked. This measurement and the original measurement shall be used to calculate the elongation percent for conformance with 3.9.1. The tensile loading shall be increased to 12,000 lb and held at that load for 5 minutes while the hose is inspected for damage or weakening of the coupling grips. The tensile loading shall be released and the hose allowed a period of 10 minutes to return to normal, at which time it shall be visually inspected. The hose shall be rejected if the inspection reveals visible damage, such as wrinkling or bubbling of the cover or interior tube, an increase in length in excess of 1.5 percent, a decrease in cross sectional area in excess of 1.5 percent, or other visible indications of structural failure or delamination of the hose components. The tensile load shall then be reapplied and increased until failure occurs. The failure load and the type of failure (i.e., hose break or coupling pull-out) shall be recorded. The rate of loading for the elongation and tensile tests shall be 1.0 inch per minute.

4.5.8 Flexibility test. The specimen for this test shall be a 12-inch section with square-cut ends obtained in accordance with 4.3.2.1. The load shall be applied perpendicular to the longitudinal direction of the specimen by means of two plates which evenly distribute the applied load over the entire specimen. The hose specimen shall be compressed at a rate of 1 inch per minute until the applied load has reached 100 ±2 lb force. Within 15 seconds after reaching this load, the distance between the two plates shall be measured. The distance between the plates shall not exceed 2-1/2 inches.

4.5.9 Properties of rubber components. To determine conformance to 3.3.1, the properties of rubber components, except the swelling in test fuel of the friction rubber on the reinforcing fabric, shall be determined on longitudinal specimens prepared from the hose section obtained in accordance with 4.3.2.2. After separating and buffing smooth, the tube and cover samples shall be permitted to rest not less than 30 minutes before preparing test specimens. The swelling in testing fuel of the friction rubber shall be determined using specimens cut from the sample obtained in accordance with 4.3.2.5.

4.5.9.1 Initial tensile properties. Initial tensile strength and ultimate elongation shall be determined by the procedure given in ASTM D412, using specimens cut with die C.

4.5.9.2 Tensile properties after immersion. The tensile strength and ultimate elongation after immersion in ASTM Reference Fuel B for 46 ±1/2 hours at 73 ±4 degrees Fahrenheit (°F) shall be determined in accordance with ASTM D471, using specimens cut with die C of ASTM D412. Tensile strength shall be based on the swollen cross sectional area of the specimen.

4.5.9.3 Tensile properties after oven aging. The tensile strength and ultimate elongation after oven aging shall be determined in accordance with ASTM D573, using specimens cut with die C of ASTM D412, except that the aging period shall be 70 ±1/4 hours at 212 ±2°F.

4.5.9.4 Volume change after immersion. The change in volume of samples of the tube, cover, and friction after immersion in ASTM Reference Fuel B for 46 ±1/2 hours at 73 ±4°F, shall be determined in accordance with ASTM D471. The change in volume shall be reported as a percent of the original volume.

4.5.9.5 Initial adhesion. The adhesion of the tube and cover to the reinforcement, and of the plies of reinforcement to each other, shall be determined in accordance with ASTM D413 Machine Method, and shall meet the requirement of 3.3.1.

4.5.9.5.1 Specimens. Strip or ring specimens shall be prepared in accordance with ASTM D380. For determining adhesion between plies of reinforcement, the plies to be separated must be at opposing angles. Three specimens of each interface shall be tested.

4.5.9.6 Adhesion after immersion. The adhesion of the tube and cover to the reinforcement, and of the plies of reinforcement to each other, shall be determined after the test specimens (see 4.5.9.5.1) have been immersed in ASTM Reference Fuel B of ASTM D471 for 46 ±1/2 hours at 80 ±9°F. The procedure for adhesion shall be ASTM D413 Machine Method, except that the wet specimen shall be tested within 15 minutes after it is removed from the fluid. The adhesion values shall meet the requirement of 3.3.1.

4.5.9.7 Nonvolatile extractable material.

4.5.9.7.1 Test specimen. Each specimen shall consist of strips about 1/16 inch square by 2 inches long, totaling about 5 grams in weight, cut from buffed pieces of the tube of the hose.

4.5.9.7.2 Procedure. The specimens shall be weighed and placed in an extraction thimble in the extraction apparatus in accordance with ASTM D297. One hundred milliliters (mL) of ASTM Reference Fuel A of ASTM D471 shall be added to the flask. The specimen shall be extracted for 46 ±1/2 hours at such a rate that 2-1/2 to 3-1/2 minutes are required to fill the empty extraction cup. The extract shall be poured into a weighed container. The specimen and flask shall be rinsed with 25 mL of fresh Reference Fuel A and the wash added to the extract. The nonvolatile residue shall be determined from the extract according to ASTM D381, except that the evaporation time shall be 45 minutes. The weight of the residue shall be expressed as percent of the original weight of the specimen. The test shall be performed in duplicate and results averaged.

4.5.9.8 Phosphate plasticizer test. Phosphate plasticizer shall be determined qualitatively in accordance with method 15825 of FED-STD-601, using a small piece of clean sodium about the size of a pea, a test tube about 3 inches long, and the specimens of the residue remaining after the nonvolatile extractable material test specified in 4.5.9.7. The procedure shall be repeated if phosphorus is found, omitting addition of the nonvolatile extractable material in order to determine whether phosphorus was present in any form in any of the reagents used.

4.5.9.9 Resistance to ozone. A sample of the cover shall be tested for ozone resistance in accordance with Method B of ASTM D518 and ASTM D1149 except that after conditioning for 24 hours in an ozone-free atmosphere the looped sample shall be exposed for 166 ±1/2 hours at 100 ±2°F to an atmosphere containing 100 parts of ozone per hundred million parts of air by volume.

4.5.9.10 Low temperature bend test. Buffed specimens of tube and cover shall be subjected to the low temperature bend test specified in ASTM D380. The test specimens shall be held at -25 ±2°F for 72 hours prior to flexing. Evidence of cracking of the test specimens shall be cause for rejection.

4.5.10 Hose support ring test. Approval for the hose support ring for the 6-inch hose couplings will be based on the following test:

a. Using a Universal Tensile Testing Machine, a tensile testing harness will be prepared so that the bearing surface for the ring is circular having a maximum diameter of 6.89 inches. The bearing surface shall be held by the testing machine so that when loaded it will not rotate or skew to one side. A swivel hook with a latch (with a working load rating of 4 tons) will be attached to one of the line attachment points on the ring. The swivel will be attached to a 2-foot long 5/8-inch wire rope sling using a shackle (with a working load rating of 4 tons). The other end of the sling should be attached to the testing machine in a safe and appropriate manner.
b. Gradually load the ring to 6,000 lb. Gradually release the load. Repeat this operation nine additional times.
c. Load the ring to 6,000 lb and hold the load for 15 minutes. Release the load and examine the ring.

Change in inner diameter of the ring greater than 5 percent constitutes failure of this test.

4.6 Packaging inspection. The preservation, packing, and marking of the hose shall be inspected to the requirements of Section 4 of MIL-H-775.

5. PACKAGING

5.1 Preservation, packing, and marking. The hose shall be preserved, packaged, packed and marked in accordance with MIL-H-775 with the level of preservation and level of packing as specified (see 6.2).

6. NOTES

(This section contains information of a general or explanatory nature that may be helpful, but is not mandatory.)

6.1 Intended use. Hose covered by this specification is intended for transfer of oil and gasoline as part of a buoyant fueling system.

6.2 Acquisition requirements. Acquisition documents should specify the following:

a. Title, number, and date of this specification.
b. Issue of DODISS to be cited in the solicitation, and if required, the specific issue of individual documents referenced (see 2.1.1 and 2.2).
c. When first article is required for inspection and approval (see 3.1, 4.2.1, and 6.4).
d. Level of preservation and level of packing required (see 5.1).

6.3 Data requirements. When this specification is used in an acquisition and data are required to be delivered, the data requirements shall be developed as specified by an approved Data Item Description (DD Form 1664) and delivered in accordance with the approved Contract Data Requirements List (CDRL), incorporated into the contract. When the provisions of DoD Federal Acquisition Regulations (FAR) Supplement, Part 27, Sub-Part 27.475-1 (DD Form 1423) are invoked and the DD Form 1423 is not used, the data should be delivered by the contractor in accordance with the contract or purchase order requirements.

6.4 First article. When a first article inspection is required, the item will be tested and should be a first production item or it may be a standard production item from the contractor's current inventory as specified in 4.2.1. The first article should consist of one hose assembly. The contracting officer should include specific instructions in acquisition documents regarding arrangements for examination, test, and approval of the first article.

6.5 Sampling procedures.

6.5.1 Sampling for examination. Recommended inspection level is II and Acceptable Quality Level is 1.0 for major defects and 4.0 for minor defects (see 4.3.1).

6.5.2 Sampling for tests. Recommended inspection level is S-3 and Acceptable Quality Level is 4.0 (see 4.3.2).

6.6 Subject term (key word) listing

Fueling
Hydrostatic tests
Support ring

Custodian:
Navy - YD

Preparing Activity:
Navy - YD

(Project 4720-N049)

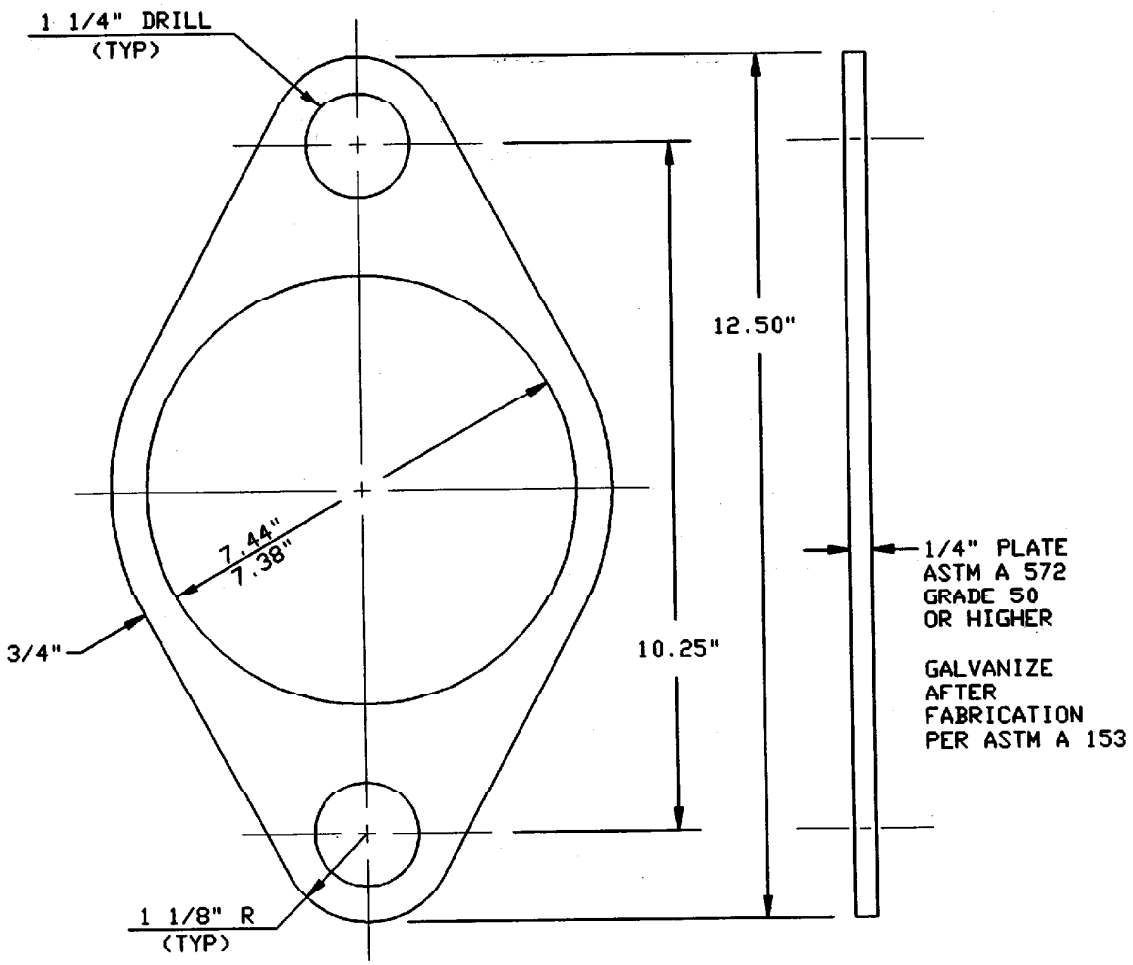

NOTES:

1. Mechanically formed preferred to torch cutting.
2. 1/32" x 45° chamfer each side of 1 1/4" holes.
3. Do not scale.

FIGURE 1. Ring, hose support Mark no. RHS - 6.