MIL-HDBK-660A
7 July 1972
SUPERSEDING
MIL-HDBK-660
9 September 1963

MILITARY STANDARDIZATION HANDBOOK

FABRICATION OF RIGID WAVEGUIDE ASSEMBLIES (SWEEP BENDS AND TWISTS)

FSC 5985

DEPARTMENT OF DEFENSE
WASHINGTON, D. C. 20360

MIL-HDBK-660A
Fabrication of Rigid Waveguide Assemblies (Sweep Bends and Twists)
7 July 1972

1. This standardization handbook was developed by the Department of Defense with the assistance of Industry in accordance with established procedures.

2. This publication was approved for printing on 7 July 1972 and inclusion in the military standardization handbook series.

3. This document provides information on methods of fabricating waveguide assemblies for rigid RF transmission lines. It provides information and guidance to personnel concerned with the fabrication of waveguide assemblies to fit equipments and circuits in the field. The handbook is not intended to be referenced in purchase specifications except for informational purposes, nor shall it supersede any specification requirements.

4. Every effort has been made to reflect the latest information on fabrication of waveguide assemblies. It is the intent to review this handbook periodically to insure its completeness and currency. Users of this document are encouraged to report any errors discovered and any recommendations for changes or inclusions to Commander, Naval Electronic Systems Command, ELEX 0517, Washington, D.C. 20360.

CONTENTS

SECTION Page

1. SCOPE 1

1.1 General 1
1.2 Design 1

2. REFERENCED DOCUMENTS 5

3. PREPARATION FOR BENDING AND TWISTING 5

3.1 Fabrication of template 5
3.2 Annealing 7
3.2.1 Brass waveguide 7
3.2.2 Filling with gas before annealing (optional) . . . 8
3.2.3 Aluminum waveguide 8
3.3 Filling 8
3.3.1 Alloy method 8
3.3.2 Rosin method 9

4. FABRICATION OF BENDS AND TWISTS 10

4.1 Bending 10
4.1.1 Pines bending machine 10
4.1.2 Wallace bending machine 18
4.1.3 Hydraulic push press and portable hydraulic bender method 18
4.1.4 Hand bending machine 23
4.1.5 Bench vise 23
4.2 Twisting the waveguide 23

5. PRE-ASSEMBLY OPERATIONS 27

5.1 Removal of filling 27
5.1.1 Alloy Method 27
5.1.2 Rosin Method 27
5.2 Removal of dents and wrinkles from waveguide 27
5.3 Cutting 28
5.3.1 Hacksaw 28
5.3.2 Power saw 28
5.3.3 Squareness of cut 28
5.3.4 Modifications of flanges and heavy wall waveguide for proper fit 28
5.4 Cleaning 28

6. ASSEMBLY 28

6.1 Attachment of flanges 28
6.1.1 Assembly of contact or cover flange to waveguide 28

CONTENTS (Continued)

SECTION Page

6.1.2 Assembly of choke or socket flange to waveguide 31
6.1.3 Clamps and jigs 32
6.2 Silver brazing brass waveguide 32
6.3 Brazing flanges on aluminum waveguide 38
6.3.1 Torch tips 38
6.3.2 Brazing rod 38
6.3.3 Brazing 38
6.4 Dip brazing aluminum waveguide 38
6.4.1 Brazing flux 38
6.4.2 Preparation of parts 38
6.5 Dry air piping connections 40

7. FINISHING OPERATION 40

7.1 Finishing operation 40
7.1.1 Cleaning waveguide 40
7.1.2 Smoothing 40

ILLUSTRATIONS

Figure

1 Waveguide side and bend identification 2
2 Electrical length of bend 4
3 Wooden waveguide template 6
4 Wire template 6
5 Template for waveguide twist 7
6 Wall distortion of bend 11
7 Draw bend 12
8 Types of mandrels 13
9 Undersize plug mandrel setting 13
10 Wrinkling caused by tapered mandrel 15
11 Mandrel setting too deep 15
12 Inherent gap between tangent point and lip of wiper die 15
13 Depth of support of plug, form, and ball mandrels 16
14 Details of bending forms for Wallace bending machine 19
15 Bending forms for edgewise bend for 3 x 1-1/2-inch guide . . . 19
16 Detail of bending forms for edgewise bends for 3 x 1-1/2-inch guide 19
17 Bending form for sideways bend for 3 x 1-1/2-inch guide 20
18 Detail of forms for sideways bend 20
19 Greenlee hydraulic bender, model 775 21
20 Bending waveguide in simple hydraulic press 21
21 Waveguide dies used with Greenlee bender 22
22 Waveguide hand bending tool 23
23 Twisting machine for waveguide 24

ILLUSTRATIONS (Continued)

Figure		Page
24	Twisting machine detail	24
25	Cross section of clamps for 3 x 1-1/2-inch waveguide twisting machine	25
26	Waveguide twisting tool for 3 x 1-1/2-inch waveguide	25
27	Tool for use with twisting machine	26
28	Modifying standard RG-95/U heavywall aluminum waveguide for use with standard UG-406A/U choke flange	29
29	Modification of standard UG-406A/U choke flange for use with standard RG-95/U heavywall aluminum waveguide	30
30	Through flange on waveguide	31
31	Concentricity of waveguide and flange	32
32	Squareness of flange face with waveguide	33
33	Waveguide and flange assembly-butt design	34
34	Waveguide squareness	35
35	Torch brazing	36
36	Jig for through flange	36
37	Silver soldering waveguide and flange-sleeve design	37
38	Directing flame on contact or cover flange	37
39	Brazing waveguide and flange-butt design	39
40	Fitting for air connection	41

TABLES

Table		
I	Waveguide bend values	2
II	Surface roughness tolerances of waveguides	42

1. SCOPE

1.1 General.

1.1.1 This handbook is intended for the electronic installations technician to be used as a guide for fabricating rectangular waveguide bends and twists used in the microwave region of the electronic spectrum.

1.1.2 Where bends and twists are required in equipment, it may not always be possible to obtain bends and twists of the exact lengths or radii required because they are not standard, and therefore are not carried in supply, or manufactured by industry as a stock item. By using the techniques described in this handbook such bends and twists can be fabricated in the field, and the equipment for which they are intended can be placed in service in a shorter time than purchased parts could be supplied.

1.1.3 This handbook describes the assembly and finishing of components fabricated from the two most commonly used materials, brass and aluminum. The processes and methods used in the fabrication of waveguide assemblies from other materials are similar to the procedures described herein. Careful attention should be paid, however, to brazing only the components made from similar metals to prevent the possibility of galvanic action between parts.

1.2 Design.

1.2.1 Waveguides are supplied in straight lengths of from 6 to 14 feet, but usually the length is 10 feet. The number of joints or couplings in a run should be kept to a minimum in order to obtain the most efficient electrical transmission. In an installation, there will be a need for bends, twists, and off-sets. Since all conditions cannot be met with standard fittings, it is desirable to be able to form bends and twists in the straight sections of the waveguide. These can be formed in the full straight lengths by the methods described in this handbook.

1.2.2 Proper identification of waveguide bends referenced herein is provided in figure 1.

1.2.3 For purposes of this handbook, the term twists means a waveguide configuration similar to those shown in figures 23 and 24. These illustrations should enable a technician to differentiate between twists and those waveguide assemblies that are constructed of ready-made elbows and sweep bends.

1.2.4 Bending of corrosion-resisting steel or magnesium waveguides is not permissible.

1.2.5 Ordinarily, bends and twists should not be sharper than those given in table I, but it is possible to make sharper bends and twists than specified herein without causing excessive attenuation, provided that reflections are avoided. This is done by forming the bend so that its electrical length (mean "L" in figure 2) is exact multiple of waveguides half wavelengths, and preferably at the midband of the frequency range at which it is to operate. This will cause the reflection at either end of the bend to cancel out. Similarly,

twists may be so designed that their length is an exact multiple of waveguide half wavelengths.

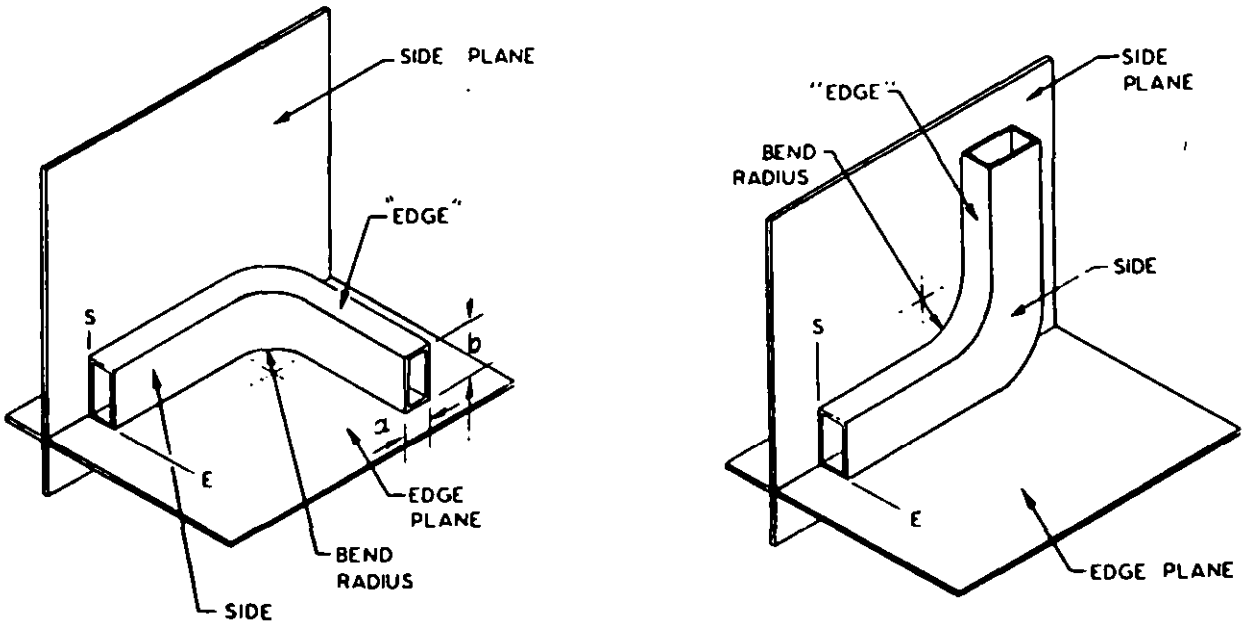

"E" PLANE BEND = EASY BEND = WIDE SIDE BEND

"H" PLANE BEND = HARD BEND = NARROW EDGE BEND

Figure 1. Waveguide side and bend identification.

Table I. Waveguide bend values.

Waveguides	Bending Radius	Dimension
23 to 6-1/2 inches	Use manufactured elbows	
6-1/2 x 3-1/4 inches	Minimum bending radius "E" or "H" Minimum length for 90-degree twist Maximum inside wall variance	24 inches 36 inches ± 1/8 inch
3 x 1-1/2 inches	Minimum bending radius "E" or "H" Minimum length for 90-degree twist Maximum inside wall variance	18 inches 36 inches ± 1/16 inch
1 x 3 inches RG 109/U	Minimum bending radius "E" No "H" bends, use manufactured elbows Minimum length for 90-degree twists Maximum inside wall variance	12 inches 30 inches ± 1/16 inch

Table I. Waveguide bend values (continued)

Waveguides	Bending Radius	Dimension
3/4 x 1-1/2 inches RG 50/U RG 106/U	Minimum bending radius, "E" No "H" bends, use manufactured elbows Minimum length for 90-degree twists Maximum inside wall variance	12 inches 15 inches ± 1/32 inch
5/8 x 1-1/4 inches	Minimum bending radius, "E" Minimum bending radius, "H" Minimum length for 90-degree twist Maximum inside wall variance	6 inches 12 inches 18 inches ± 1/32 inch
1-1/2 x 1/2 inches RG 110/U	Minimum bending radius, "E" Minimum length for 90-degree twist Maximum inside wall variance	6 inches 15 inches ± 1/32 inch

1.2.6 Never make a bend or twist sharper than the specified minimum unless conditions make it absolutely necessary. Under no conditions should the radius of a bend or twist be less than one full wavelength of the center frequency for any waveguide. The reflections caused by poorly matched bends can result in a high standing wave ratio.

$$\text{Wavelength in cm} = \frac{30{,}000}{f \text{ in MHz}}$$

$$\text{Wavelength in inches} = \frac{11{,}808}{f \text{ in MHz}}$$

EXAMPLE A: The radii of preformed bends for RG 48/U is 7.5 inches, whereas, the radii of bends formed for RG 48/U TE_{10} mode wavelength range (lowest to highest recommended operating frequency) is from 4.539 to 2.987 inches. The mean wavelength is 3.763 inches and a waveguide half wavelength is 1.8825 inches. Any multiple of 1.8825 inches that generates a radius greater than 7.5 inches shall be used as the mean electrical length of a formed bend for RG 48/U waveguide.

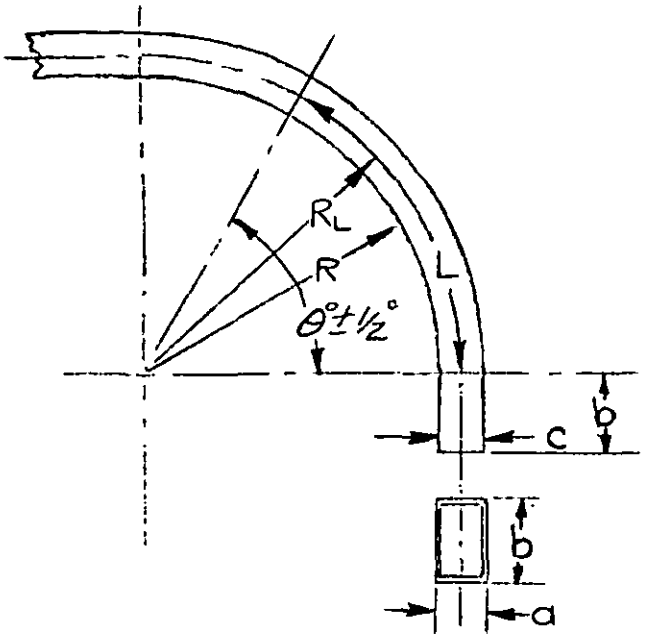

R_L = 57.32 degrees x $\frac{L}{\theta^\circ}$, R = $R_L - \frac{c}{2}$

L = mean electrical length
c = height or width of outer dimension of waveguide depending on plane of bend
b = larger dimension of waveguide

Figure 2. Electrical length of bend

To determine the radius of a 90-degree bend the following calculations are made.

From the above formula in Example A $R_L = \frac{57.32 \text{ degrees} \cdot L}{90 \text{ degrees}}$ θ = 90 degrees

R_L = 0.637L
Referring to RG 48/U, operating in the TE_{10} mode where R_L is greater than $7.5 + \frac{a}{2}$ inches, where R = 7.5 inches and L is a multiple of $\lambda/2$.
λ = 3.763 inches, $\lambda/2$ = 1.8825 inches
a = 1.34 inches, b = 2.84 inches, c = 1.5 inches for an "E" bend
Then Let L = 6 x $\lambda/2$ = 11.298 inches,
then R_L = 0.637 x 11.298 = 7.2 inches and R = 6.45 inches.
Since the resultant value is less than 7.5 inches, the radius cannot be used.

Based on similar computations,

when: L = 7 x $\lambda/2$ = 13.181, R_L = 8.42, R = 7.67 inches
L = 8 x $\lambda/2$ = 15.06, R_L = 9.593, R = 8.823 inches and so forth;
hence, the radii computed for a value of L which is a multiple of $\lambda/2$ of 7 or greater may be used.

For an "H" bend, c = 3.0 inches
when: L = 7 x $\lambda/2$ = 13.181, R_L = 8.42, R = 6.92 inches
L = 8 x $\lambda/2$ = 15.06, R_L = 9.593, R = 8.09 inches and so forth;
hence a value of L which is a multiple of $\lambda/2$ of 8 or greater may be used.

2. REFERENCED DOCUMENTS

2.1 The issues of the following documents in effect on the date of invitation for bids form a part of this handbook to the extent specified herein.

SPECIFICATIONS

FEDERAL

O-F-499	- Flux, Brazing, (Silver Alloy, Low Melting Point)
QQ-B-654	- Brazing Alloy, Silver
QQ-B-655	- Brazing, Alloys, Aluminum and Magnesium, Filler Metal

MILITARY

MIL-W-3970	- Waveguide Assemblies, Rigid, General Specification for

STANDARDS

MILITARY

MIL-STD-645	- Dip Brazing of Aluminum Alloys

PUBLICATION

MILITARY

NAVSHIPS 0901-920-0003	- Welding and Allied Processes
NAVSHIPS 0967-000-0110	- Electronics Installation and Maintenance Book - Installation Standards

(Copies of specifications, standards, drawings, and publications required by suppliers in connection with specific procurement functions should be obtained from the procuring activity or as directed by the contracting officer.)

2.2 Other publications. The following document forms a part of this handbook to the extent specified herein. Unless otherwise indicated, the issue in effect on date of invitation for bids or request for proposal shall apply.

USA STANDARDS INSTITUTE
B46.1 - 1962 SURFACE TEXTURE

(Application for copies should be addressed to United States of America Standards Institute, 10 East 40th Street, New York, N.Y. 10016.)

3. PREPARATION FOR BENDING AND TWISTING

3.1 Fabrication of template. The first step in fabricating waveguide bends is to make a full scale template (see figures 3 and 4). The purpose of the template is to provide the shop with accurate information as to the shape, radius, and angle of all bends and twists in the waveguide as well as the position of the connection, flange holes, and overall length of the run.

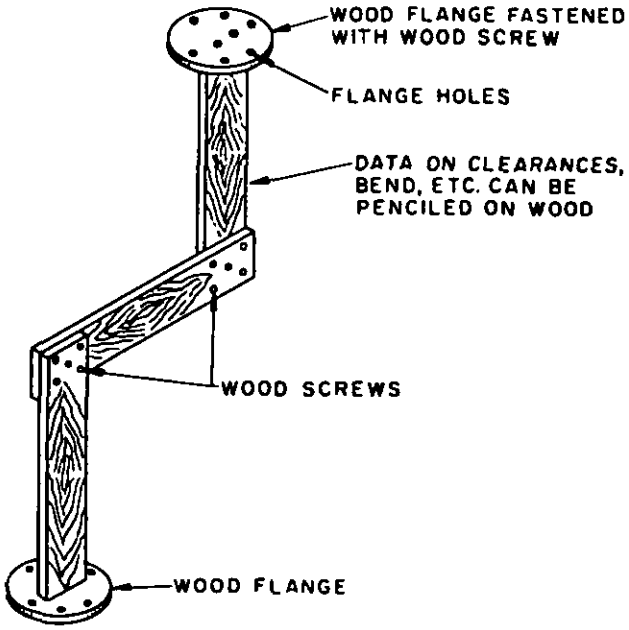

Figure 3. Wooden waveguide template

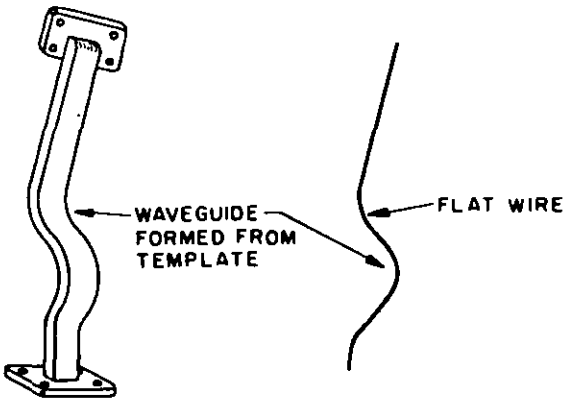

Figure 4. Wire template

3.1.1 The template can be made of 1/2-inch mild steel, wire, plastic, or wood. If the template is made of wood, choose its size to approximate the size of the waveguide to be installed. The flange can be made with wood to the exact dimensions including hole spacings. By using a wood saw, hammer, nails, and woodscrews, the template could be made at its given location and returned to the shop for waveguide fabrication. The advantages of using wooden templates include:

(a) A rigid shape can be transported easier than a flexible one.
(b) Wood can be cut to approximate the dimensions of the waveguide.
(c) Ease of marking wood to note proper clearance for bends.

The disadvantage in using wooden templates is that a gradual radius cannot be shown.

3.1.2 When the template is at the shop, it can be placed on a bench or table and one flange can be fastened securely to the table in the proper position. The waveguide bend to be fabricated can then be made up until it sets between these flanges and conforms to the shape of the template. For making a twist in a waveguide where no "H" or "E" bends are required, a template as shown in figure 5 can be used.

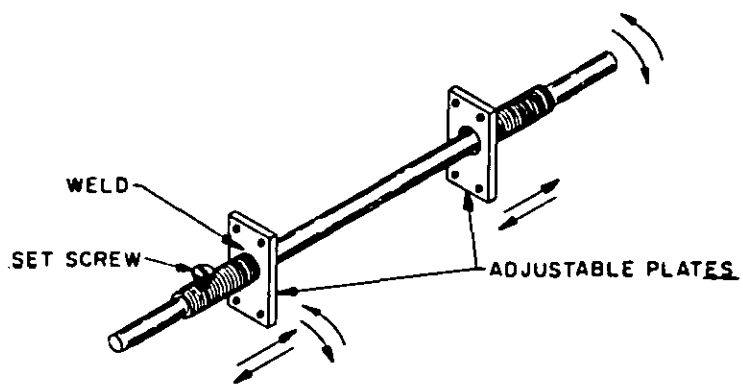

Figure 5. Template for waveguide twist

3.2 Annealing. Annealing is always necessary if the waveguide is to be formed in any way. If the guide is filled with rosin or alloy, filling is performed after annealing.

3.2.1 Brass waveguide. A commercial brass waveguide is 90 percent copper and 10 percent zinc. To properly anneal this waveguide, it should be heated to a temperature of 427°C (800°F) to 565°C (1050°F), depending on the degree of softness desired. Estimated time at temperatures for typical tubes would be 8 minutes for 0.040-inch gage wall tubing and 15 minutes for 0.080-inch wall tubing. The waveguide should then be cooled in air.

NOTE

The higher temperature will result in softer waveguide but should only be used for making sharp radius bends.

3.2.1.1 A good average temperature for the majority of bends is 482°C (900°F). If temperature control is not possible, 650°C is approximately cherry red on brass.

3.2.1.2 As an emergency, a waveguide can be annealed using two torches. The torch tip should be selected that gives a large soft or spread-out flame to avoid hot spots. Move the flame over both sides of the waveguide continuously until the brass is cherry red.

3.2.2 Filling with gas before annealing (optional). This process applies only to commercial bronze, 90 percent. If the procedure outlined below is followed, it will eliminate oxidation; and the waveguide will remain clean, smooth, and free from discoloration.

(a) Provide wooden plugs for the two ends of the waveguide sections. These should fit tightly.

CAUTION

IF THE PLUGS FIT TOO TIGHTLY WHEN COLD, THEY WILL EXPAND AND DISTORT THE WAVEGUIDE WHEN HEATED.

(b) In one of the plugs, insert a hose connection and valve.
(c) Close the waveguide section with the wooden plugs and attach a carbon dioxide tank to the hose connection.
(d) Fill the sections with carbon dioxide until no air remains inside. When the guide is properly filled, a match will go out when placed in front of the escape valve. Never use more than 2 pounds of pressure per square inch.
(e) Now anneal the section in the usual way as outlined above.

3.2.3 Aluminum waveguide. The proper annealing temperature for aluminum waveguide is 343°C to 427°C (650°F to 800°F). The amount of time in the furnace should only be long enough to insure that the temperature is the same throughout the metal. Too high a temperature or too much time in the furnace will result in large grain size. The waveguide is then cooled in air at room temperature. Too rapid cooling will result in warping.

3.3 Filling. To prevent deformation, the waveguide must be filled with some solid material before bending unless a bending machine with a mandrel is used. Before twisting, the guide must always be filled. Filling may be done with alloy or rosin; separate procedures for each of these methods as in 3.3.1 and 3.3.2.

3.3.1 Alloy method. When the alloy method is used for filling, the guide should first be thoroughly annealed as outlined in 3.2 and allowed to cool. The guide should then be filled as follows:

(a) Tightly plug the guide at one end with a wooden plug.
(b) Melt the required quantity of bending alloy in a welded corrosion-resisting steel container suspended in boiling water. (The alloy melts at 71°C to 82°C (160° F to 180°F).

NOTE

The bending alloy is a type of Wood's metal (a mixture of bismuth, lead, tin, and cadmium). The trade names are Cerrobend, Bendalloy, or equal.

(c) Fill the waveguide with light oil (such as SAE 10), cover the top end, and move the guide about so as to splash the oil on all interior surfaces. Then pour out the oil, leaving 1 or 2 inches in the bottom of the guide.

CAUTION

CAREFUL ATTENTION TO OILING IS NECESSARY TO PREVENT THE ALLOY FROM TINNING THE GUIDE, MAKING CLEANING VERY DIFFICULT.

(d) Fill the guide with the melted alloy, allowing the alloy to run down the side of the guide in order to avoid air pockets.
(e) Immediately lower the filled guide into a quench tank containing rapidly circulating cold water, leaving it there long enough for the guide and alloy to reach tank temperature throughout.

NOTE

Rust-resistant iron or corrosion-resisting steel is required for tank construction. Plain steel will rust when in constant contact with boiling water and steam (formed during initial contact of hot guide). Copper, aluminum, and galvanized iron tank will contaminate the alloy.

(f) Remove the filled guide and rewarm it in hot water to about 90°F to 100°F. Remove the wooden plug from the bottom of the guide. The guide is now ready for bending and twisting.

IMPORTANT

Good results with alloy fillers depend entirely on rapid quenching, adequate cooling and rewarming before bending.

3.3.2 Rosin method. When rosin is used as a filler, the guide must first be annealed and then filled as follows:

(a) Estimate how much rosin is needed to fill the guide. Melt the rosin. Melting is usually done in a vat by means of steam coils.

CAUTION

IF OTHER MEANS OF HEATING ARE USED, BE SURE TO HEAT THE SIDES OF THE CONTAINER FIRST. TOO MUCH HEAT APPLIED AT THE BOTTOM WILL CAUSE AN EXPLOSION.

(b) When the guide has cooled (after annealing) just enough so that it will not burn wood, drive a wooden plug in one end, place the guide in an upright position with the plugged end down, and fill with melted rosin.

CAUTION

IF THE GUIDE IS COLD, THE ROSIN WILL CONGEAL WHEN POURED FORMING AIR POCKETS WHICH WILL CAUSE THE GUIDE TO CAVE IN DURING BENDING OR TWISTING.

(c) Allow the guide to cool naturally; then look for a cone-shaped hole caused by contraction of the rosin cooling at the top end of the guide. If the hole is deep, add melted rosin and allow to cool; if not very deep, fill with loose rosin.

(d) Plug the top end of the guide with a wooden plug. The guide is now ready for bending and twisting.

NOTE

Wrinkles may be hammered out before removing the filling, because rosin when powered by hammer blows expands and occupies more space than solid filling.

4. FABRICATION OF BENDS AND TWISTS

4.1 Bending. Bending can be done by using a Pines bender, Wallace bender, hydraulic push press, portable pipe bender, hand bending machine or bench vise. The Pines and Wallace benders do not require fillers for bending. Precise metal-forming operations on the Pines and Wallace bending machines provide smoother bends than with other types of benders. Greater precision is obtainable with the Pines bender than with the Wallace bending machine. Shorter radii bends can be formed on the bending press but with accompanying guide deformation reducing the cross section area inside the bend. Double ogee curves formed by a consecutive series of bends are preferred to the use of several 90 degree elbows. Better electrical characteristics may be realized if the mechanical tolerances on the guide are maintained in bending complex forms.

4.1.1 Pines bending machine. Precision metal-forming operations can be done on a Pines Rotary Bending machine. Smooth bends can be formed to a bend accuracy of $\pm\frac{1}{2}$ degree. A complete involved shape can be produced by a series of bends. When a guide is bent, it is thrown into tension on the outside and into compression on the inside. Thickening the inner wall strengthens it;

stretching the outer wall weakens it, tending to rupture (see figure 6) the guide. The guide cross section is reduced by the tension and compression. Two types of internal support that may be used in bending are:

(a) Form bending. The filler used may be rosin, low melting alloy, nylon, polytetrafluoroethylene, or articulated metal mandrels. The guide is then formed around a radial post.

(b) Draw bending. The waveguide is drawn off an interior mandrel, either fixed or flexible, through a form-fitting radius die (see figure 7).

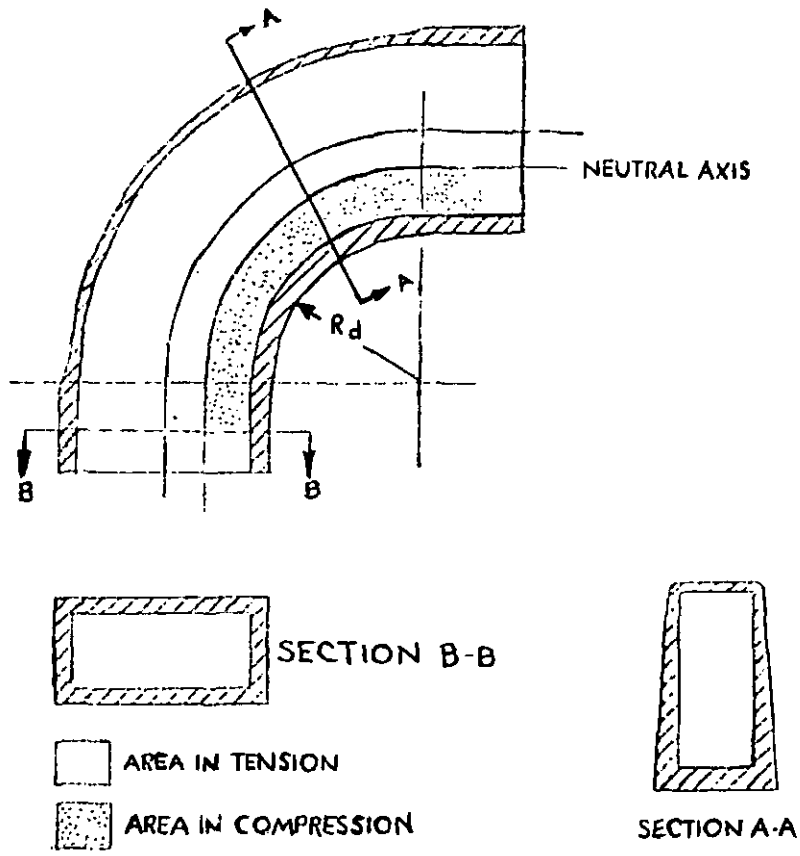

Figure 6. Wall distortion of bend

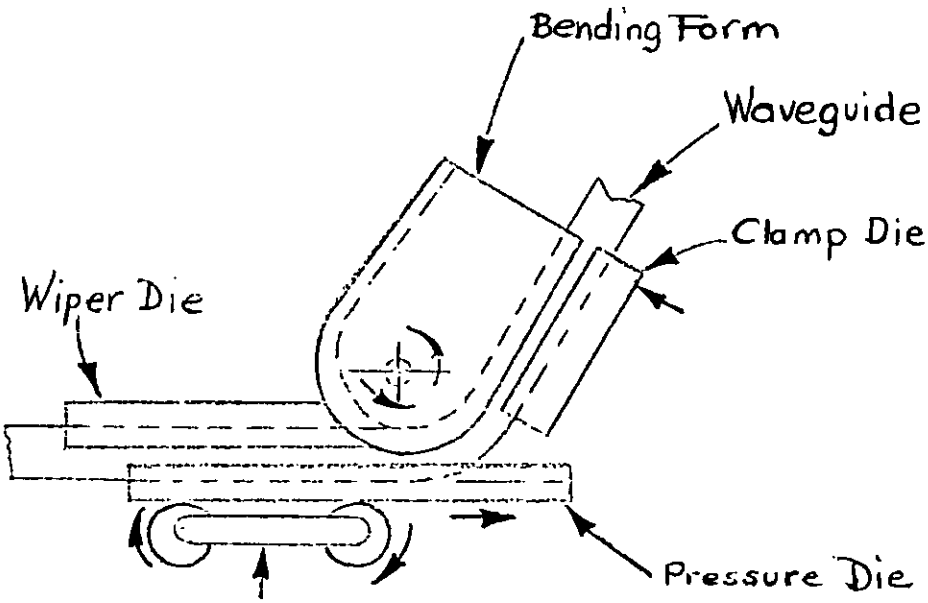

Figure 7. Draw bend

4.1.1.1 Draw bending. In draw bending the waveguide is clamped to a rotating die. When the form is rotated, the guide is drawn against a pressure die. The mandrel follows the radius while supporting the walls preventing collapse of the guide. The guide is boxed in on all sides by the outer dies. The wiper die used prevents wrinkling or buckling of the guide at the tangent point of the bend. The inside dimensions of the waveguide can be held to tolerances of ± 0.1 percent with the articulated mandrel. Tolerances approaching those of the articulated mandrel can be realized using a polytetrafluoroethylene mandrel. Small radius bends may be formed by applying the basic techniques very carefully. Complex shapes can be formed to meet design requirements of limited space. Instead of bends separated by straight sections, space can be saved when bends are placed tangent to each other.

4.1.1.2 Metal mandrel. The use of a mandrel is necessary to bend the waveguide. The various types of mandrels are plug, formed, ball, cable, and universal (see figure 8). The inside surface finish on bending depends on the type of mandrel finish.

4.1.1.2.1 Plug mandrel. The plain or plug type is the simplest form of mandrel made from solid bars rounded on the end. This mandrel may be used on moderate wall waveguide for bends having a large radius. The tip of the plug mandrel is inserted up to or just beyond the bend tangency (see figure 9). During bending, the guide is drawn around the form and pulled off the mandrel, thereby removing the internal support. However, the actual bending point, the area of greatest tendency for wrinkling, is fully supported.

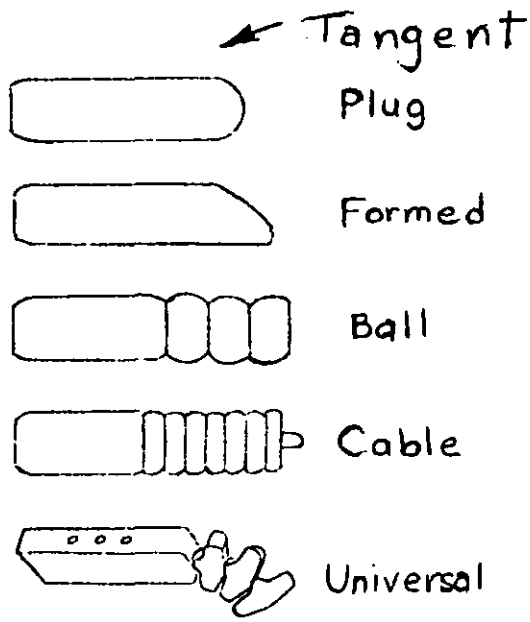

Figure 8. Types of mandrels

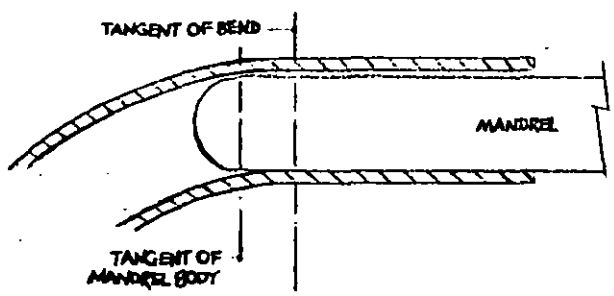

Figure 9. Undersize plug mandrel setting

4.1.1.2.2 Formed mandrel. The end of the formed mandrel is shaped to coincide with the bend considerably beyond the point of tangency. More internal support is realized with the formed mandrel. Sharper bends with thinner wall guide can be made with the formed mandrel than with the plain mandrel.

4.1.1.2.3 Ball mandrel. The single ball type mandrel has a ball tip moving in a flexible socket. The ball tip can be swung on the solid body. This movement enables it to be inserted beyond the point of tangency permitting a full radius swing as the guide is drawn into the bend. The guide inside dimension receives full support from the ball. In addition to being able to make tight radii bends on thin walled-guide, the ball mandrel performs a sizing action. A multiple-ball type mandrel extends further into the bend than the single-ball type. The greater number of balls required increases the possibility of the walls collapsing.

4.1.1.2.4 Cable mandrel. The cable type mandrel is very useful in making compound bends requiring deep mandrel support. Compound bends do not permit straight clamping between bends because the adjacent bends may have their points of tangency too near each other.

4.1.1.2.5 Universal mandrel. The universal mandrel provides twisting while draw bending. Individual bends need not be separated by short straight sections. The freedom of movement of this mandrel permits an H bend in one plane to closely follow an E-bend in the other plane. The mandrel can withstand the heavy pressures yet can hold the internal dimensions to very close tolerances.

4.1.1.2.6 Small line mandrel. Nylon and polytetrafluoroethylene mandrels may be used on a waveguide with very small cross sections and complex shapes.

4.1.1.3 Mandrel selection. The plug or form mandrel is sometimes more useful than the complicated mandrels since a perfect fit is not necessary for a specific size waveguide. An undersize mandrel extends into the waveguide beyond the tangent point. This type of mandrel provides greater support beyond the tangent of bend compared to other mandrels. Sharpness of bend and clearance between mandrel and inside of guide determine the tip placement.

4.1.1.4 Improper tooling and setting. Improper tooling and setting can result in flattening, wrinkling, or rupturing problems (see figures 10 and 11) as follows:

(a) Tapering of mandrel by improper machining or through wear.
(b) The clamp die may be causing slippage.
(c) Insufficient pressure on the pressure die.
(d) Mandrel improperly set.
(e) Adjustment of wiper die differs in the same setup for various materials.
(f) Wiper die is not as close as possible to the tangent point.
(g) Wearing of bending form and the machine spindles. Where guide tolerances are difficult to maintain, or flattening and thinning must be rigidly controlled (see figure 12) because of "off-size" waveguide, different sizes of mandrels could solve the problem.

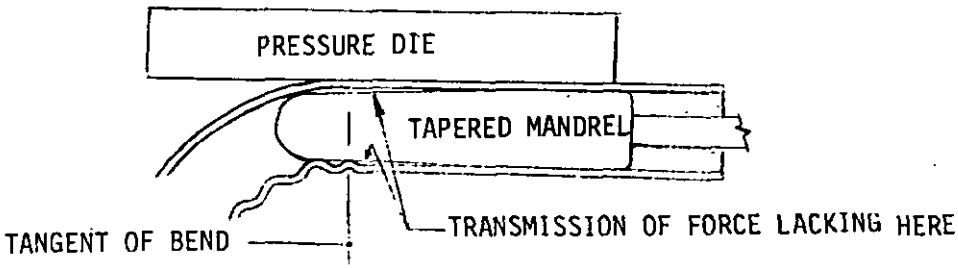

Figure 10. Wrinkling caused by tapered mandrel

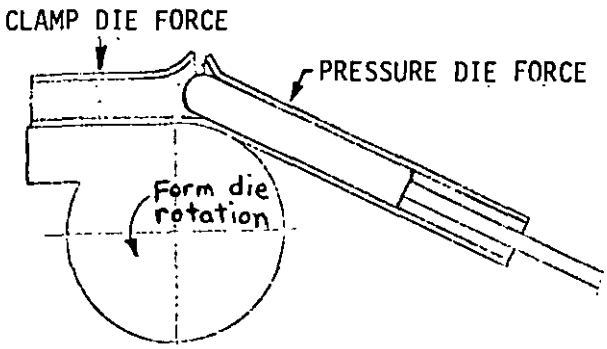

Figure 11. Mandrel setting too deep

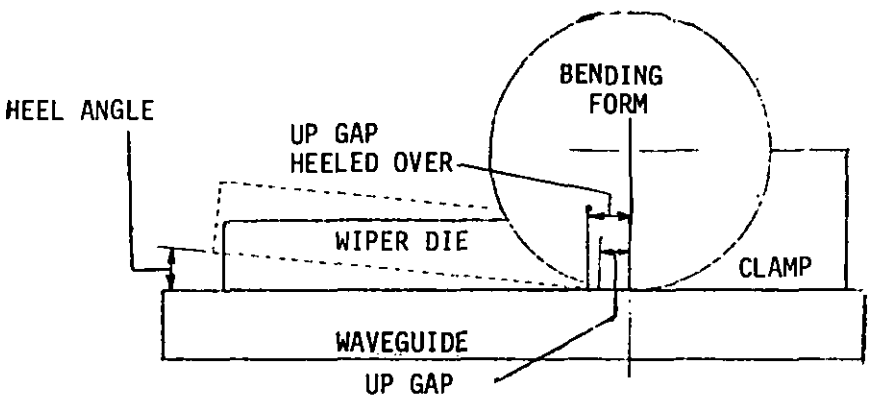

Figure 12. Inherent gap between tangent point and lip of wiper die

If a plug mandrel cannot provide a good bend before rupture occurs, use a form type mandrel shaped for the curve of the bend. The plug and form mandrels do not provide sufficient support for the thin wall guide and sharp bends. The use of a ball mandrel is necessary to extend deeply into the bend (see figure 13). Formed mandrels may be used as a compromise between the expense of a ball mandrel and insufficient support of a plug mandrel.

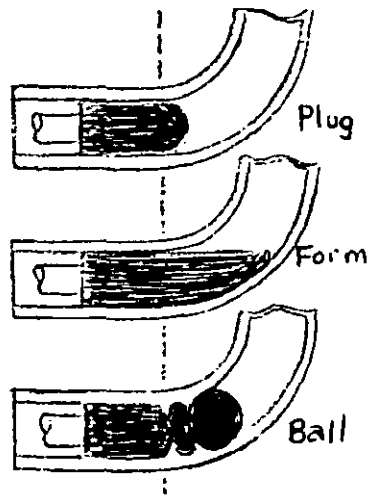

Figure 13. Depth of support of plug; form and ball mandrels

4.1.1.5 Lubrication. Effective operation entails frequent lubrication of tools. Proper adjustment of tooling is impossible if slide wear is permitted. Lubrication of the guide and mandrel reduces galling of mandrel and frictional drag. Likewise, clamp slippage, guide flattening, and rupture can be prevented. Lubricating the wiper die decreases friction and wear on the die. Slippage can be caused by allowing the lubricant to penetrate into clamping areas. Different types of material require various lubricants.

4.1.1.6 Twisting and bending. Space saving that imposes design restrictions may result in contorted shapes of waveguides. Individual bends need not be separated by straight lengths, that is, bends could be positioned tangent to each other. If it is desired to have an H bend in one plane follow an E bend in the other plane, then a mandrel with two flexing modes or a universal mandrel is required. Production of various twists during bending results from the ability to adjust the form die to different forms. The electrical characteristics of the formed shapes are superior to those of assembled shapes.

4.1.1.7 Mandrel material and finish. Tool steel is used for bending copper, brass, and aluminum. The inside surface finish of the waveguide on bending depends on the type of mandrel finish. Since scoring or marking the inside surface of the waveguide is intolerable, a tool steel mandrel may be ground finish or chrome plated. Plating extends wear life and can be replaced without major rework of the original tool. Chromed mandrels shall be replated when the chrome is worn away at any point to provide many more bends from the mandrel.

4.1.1.8 Polytetrafluoroethylene mandrel. Mandrels of polytetrafluoroethylene or fluorinated ethylene propylene (FEP) are used to support the walls of the waveguide during bending, thus eliminating the costly method of filling with rosin. It may be used for bending waveguide sizes of 3 by 1-1/2 inches and smaller.

4.1.1.8.1 The mandrels are made from a solid block of polytetrafluoroethylene or fluorinated ethylene propylene machined to the internal dimensions of the waveguide, minus .005 to minus .008. Tests have proved that the amount of clearance is critical in producing distortion-free bends. The leading edges of the mandrel are rounded slightly to aid in inserting it into the waveguide.

4.1.1.8.2 The length of each mandrel is governed by the longest bend normally made on the applicable size waveguide. At least an extra 6 inches is added to this dimension for ease of handling and to attach a device to withdraw the mandrel from the bent section.

4.1.1.8.2.1 Two methods of attaching the pulling gear are used. In the first, used on small size waveguide, a hole is drilled in the center of the wide plane of the mandrel, approximately 1 inch from the end, large enough to receive a nut of the size suitable for the pulling rod. A second hole is drilled from the center of the end of the mandrel into the first hole to receive the pulling rod. The threaded pulling rod is inserted from the end of the mandrel and screwed into the nut placed in the first hole. The second method, used on larger size waveguides, is to undercut the mandrel about 3 inches along its length and rivet to it a fabricated metal clip to which a rod is attached.

4.1.1.8.3 The self-lubricating qualities of polytetrafluoroethylene or fluorinated ethylene propylene offer a low coefficient of friction which prevents seizing, galling, and binding. It is also non-hardening and readily compressed. These characteristics give the mandrels a long life expectancy. After 200 bends, mandrels in use have shown no appreciable change in dimensions or shape. Life expectancy is estimated to be approximately 500 bends before wear will affect use of the mandrel. When that point is reached, the mandrel can be remachined to the nearest smaller size practical. The new mandrel is used in bending operations as follows:

(a) Cut waveguide tubing to size and file the edges smooth at the ends.
(b) Anneal tubing in the area to be bent.
(c) Acid clean the tubing.
(d) Inspect tubing to assure that it is clean and free of foreign matter or chips.
(e) Insert the mandrel in waveguide tubing by pushing until the center of the mandrel is in the center of the bend area.
(f) Make the bend in the conventional (cold) manner.
(g) Clamp the bent tubing in a machinist's vise.
(h) Extract the mandrel from the bent tubing, using a small winch or puller hooked to the rod in the mandrel.

4.1.1.8.4 Bends of a smaller radius can be formed with less distortion by using a polytetrafluoroethylene mandrel. Time is reduced by 61 percent because this method eliminates waiting time for the rosin to solidify, steps required to melt and burn out rosin, and acid cleaning after rosin is burned out. It also eliminates damage to bent sections during melt out, as well as the potential fire hazard and noxious fumes caused by rosin.

4.1.1.8.5 Mandrels of polytetrafluoroethylene or fluorinated ethylene propylene offer a higher degree of accuracy and ease of handling than other types.

4.1.2 Wallace bending machine. The Wallace bending machine involves an extensive set-up time and can be used to advantage only where several sections of waveguide with the same type of bend are being manufactured. The advantage of using the Wallace bending machine is that the waveguide can be bent without using a filler inside the guide. The waveguide, however, must still be annealed on the portion that is to be bent. Some of the special forms that are used with the Wallace bending machine are shown in figures 14 through 18.

4.1.3 Hydraulic push press and portable hydraulic bender method. One disadvantage encountered in using this method is that the waveguide must be filled before bending. This disadvantage can be overcome if one of the flexible mandrels previously described is used; the polytetrafluoroethylene mandrel is especially suited for these types of benders. This is the preferred method for making bends of sharper radii and where no two bends are alike. It is also the most convenient to use at a forward area or advanced base. Another distinct disadvantage to this method (using a filler) is that puckers or wrinkles that usually form as a result of the bending operation must be removed. This is done by using a rolling machine or by hammering. A typical hydraulic bender and a simple hydraulic press is shown in figures 19 through 21. The procedure for using this method is as follows:

(a) Anneal and fill the waveguide.
(b) Insert the waveguide between two bending pins or dies (with suitable protection slabs in place). A bending form, curved to suit the desired radius of the waveguide, contacts the waveguide as the hydraulic hammer moves forward. For a desired 18-inch radius bend in the waveguide, the radius of the curve of the bending form should be 17-1/2 inches. This compensates for the springback of the waveguide. A complete bend is formed by bending the waveguide in short sections along the radius distance. The bend will not be smooth but will have "puckers" or hills and valleys in the surface; these will have to be hammered out. Shift the points of the pressure of the ram. Force ram surface against the "puckers".
(c) A complete 18-inch radius, 90-degree bend can be made in the waveguide sideways (E plane as the throat and back) with one rosin filling; however, if the waveguide is bent edgewise (H plane as the back and throat), two rosin fillings are necessary.

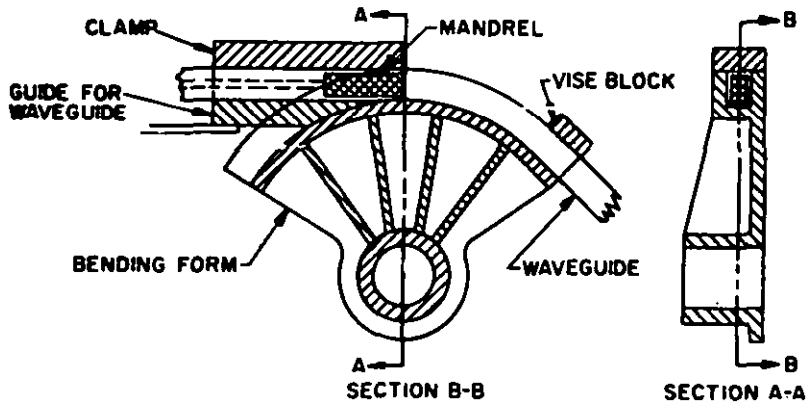

Figure 14. Details of bending forms for Wallace bending machine

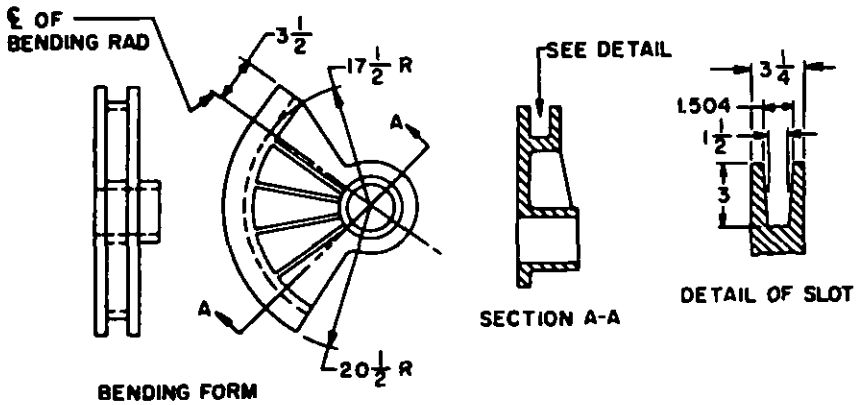

Figure 15. Bending forms for edgewise bend for 3 x 1-1/2 inch guide

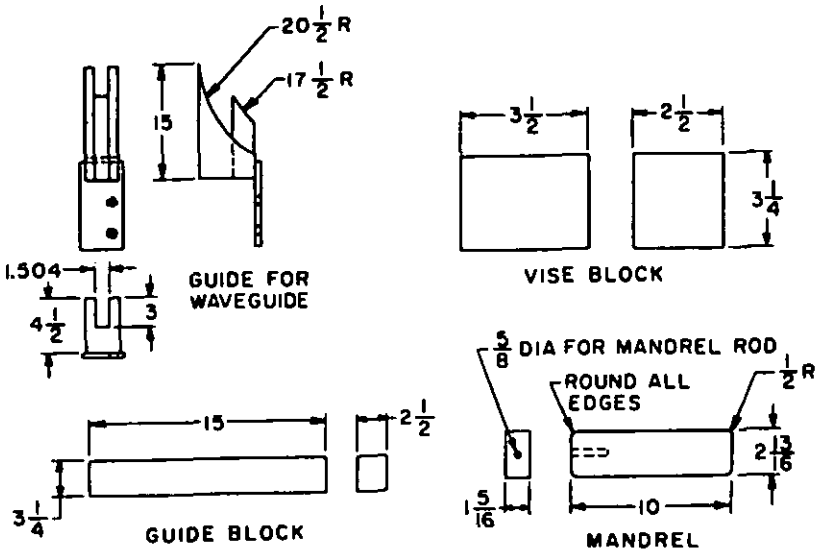

Figure 16. Detail of bending forms for edgewise bends for 3 x 1-1/2 inch guide

NOTE: Different size waveguide requires the appropriate size bending forms.

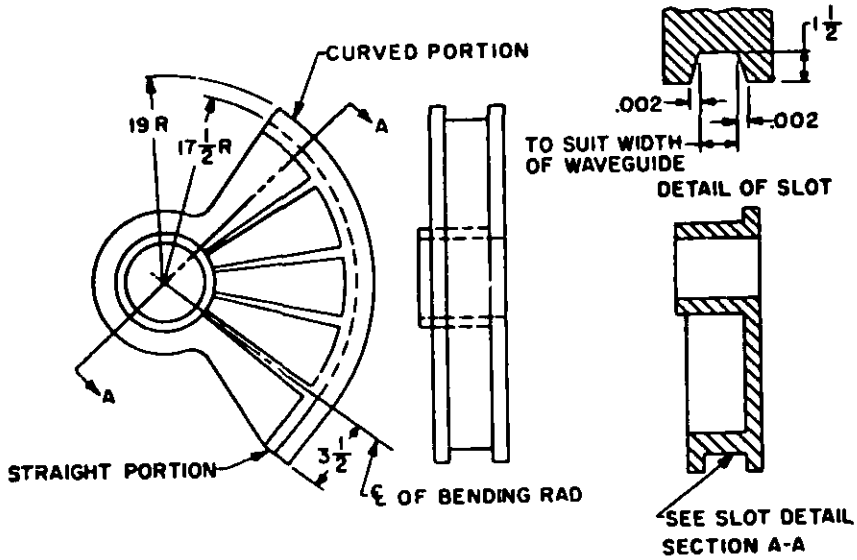

Figure 17. Bending form for sideways bend for 3 x 1-1/2 inch guide

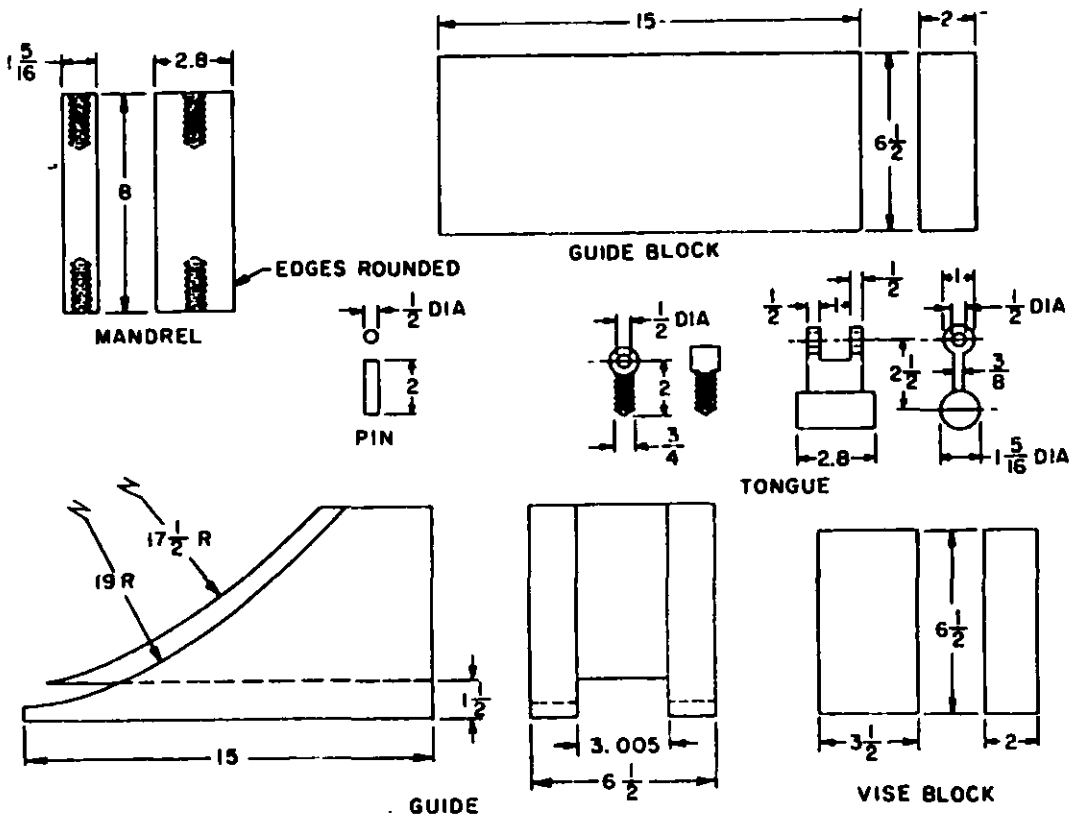

Figure 18. Detail of forms for sideways bend

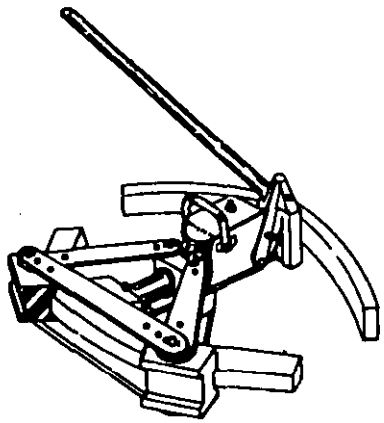

Figure 19. Greenlee hydraulic bender, model 775

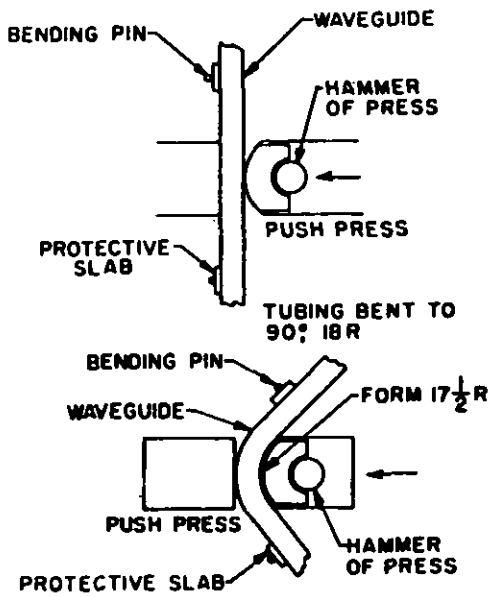

Figure 20. Bending waveguide in simple hydraulic press

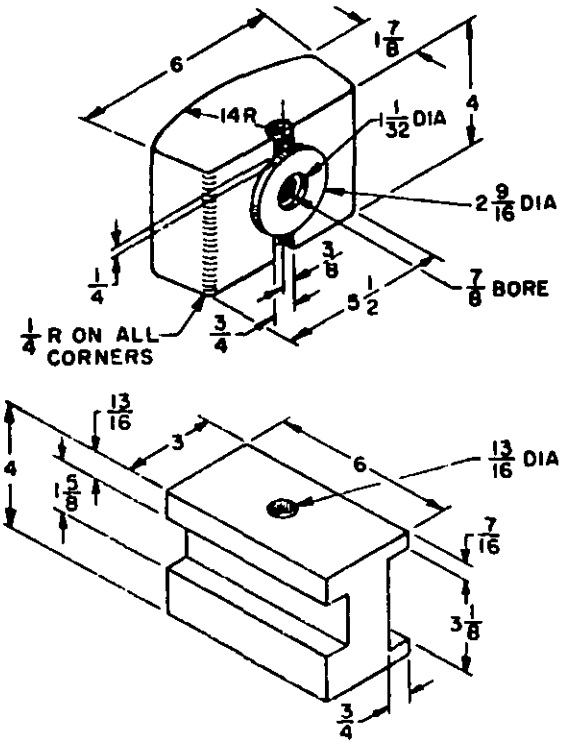

Figure 21. Waveguide dies used with Greenlee bender

(d) Bending the waveguide sideways. Bend the waveguide until it has the desired angle and a true radius. Hammer smooth the puckers in the throat of the bend with a properly shaped hammer. The radius of the face of the hammer must be as nearly like the radius of the throat as is practically possible.

(e) Bending the waveguide edgewise. Bend the waveguide approximately half way to the desired angle until visible distortions appear in the form of puckers in the throat and bulges in the side walls. Hammer smooth the puckers as explained before, and dress the walls by a 3-1/2 inch square-faced blacksmith's flatter with a suitable hammer supplying a proper blow. Another method is to insert the guide in a hand roller and roll the guide through several times with increasing pressure. After all distortion has been removed, remove the filler and re-anneal and refill the waveguide. Bend the waveguide again until it has the desired angle and a true radius. Remove the puckers in the throat as before. The increase in the thickness of the waveguide at the throat is reduced to normal by applying light blows to the flatter while it is being held firmly against the throat area of the side walls. The waveguide can be bent very satisfactorily with rosin to within 5 to 10 percent of the desired bend. This result may be obtained by a properly trained coppersmith using the previously described tools and methods.

4.1.4 Hand bending machine. If none of the previously described methods are available for bending the waveguide, it is possible to design a hand bending machine as shown in figure 22. This type of bending machine requires few parts and it is capable of making satisfactory bends in most cases, provided the operator uses sufficient time and care.

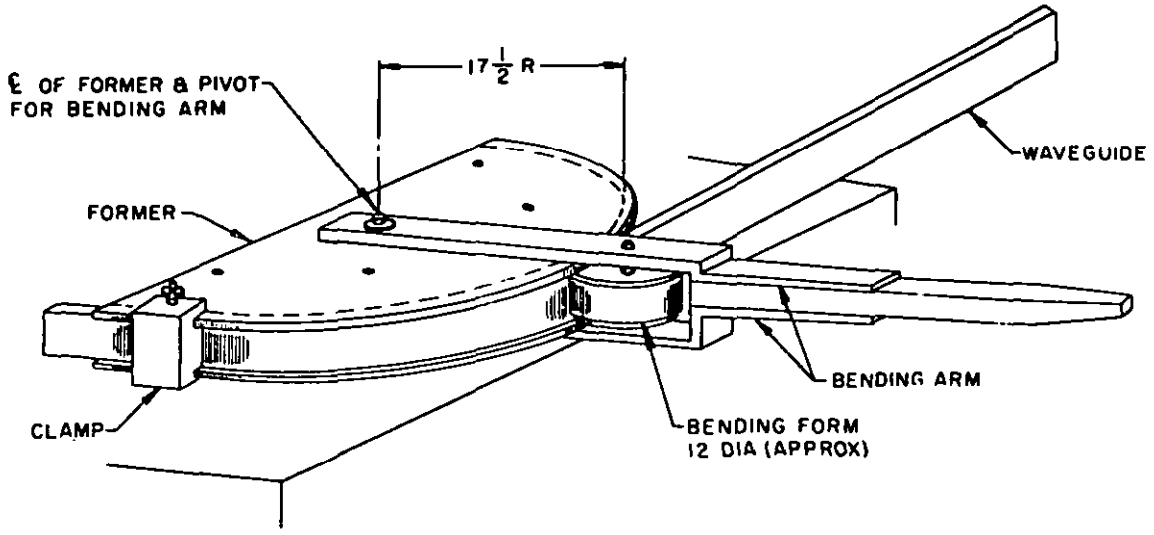

Figure 22. Waveguide hand bending tool

4.1.5 Bench vise. A waveguide of small dimensions may be formed in a bench vise.

4.2 Twisting the waveguide. The twisting of the waveguide is accomplished by the use of equipment having the essential features as shown in figures 23 through 27. The method of twisting is as follows:

(a) Anneal the waveguide along the portion of the length where the twist is to be made.
(b) Plug the waveguide section at one end, fill it, allow it to cool, and then level it off at the top.
(c) Insert the waveguide in the equipment as shown in figure 23 and twist it to the desired degree.

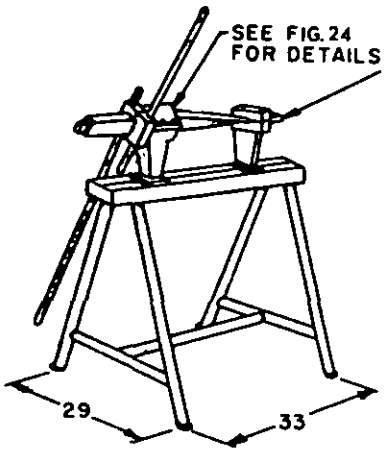

Figure 23. Twisting machine for waveguide

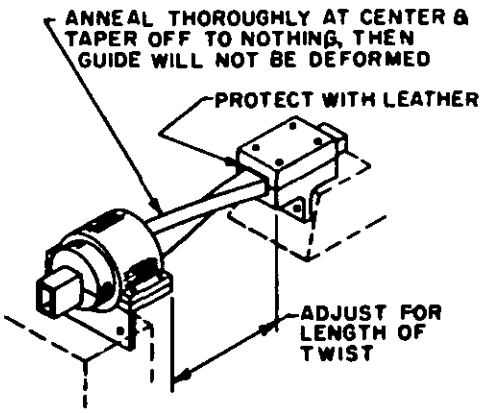

Figure 24. Twisting machine detail

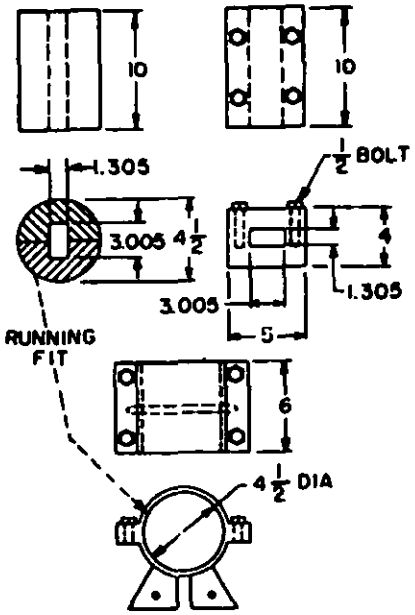

Figure 25. Cross section of clamps for 3 x 1-1/2 inch waveguide twisting machine

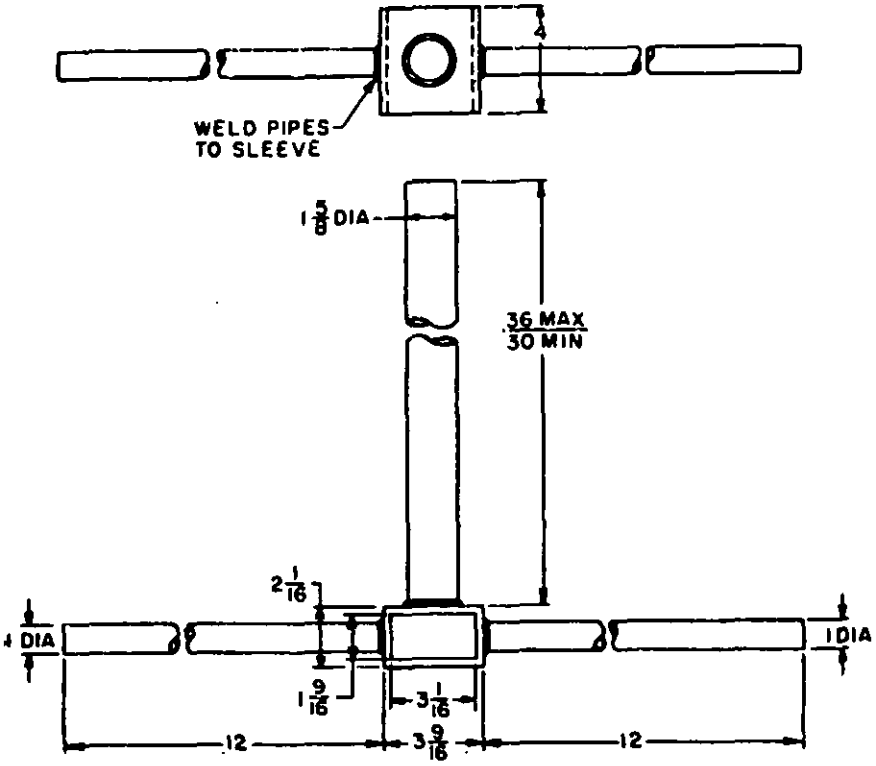

Figure 26. Waveguide twisting tool for 3 x 1-1/2 inch waveguide

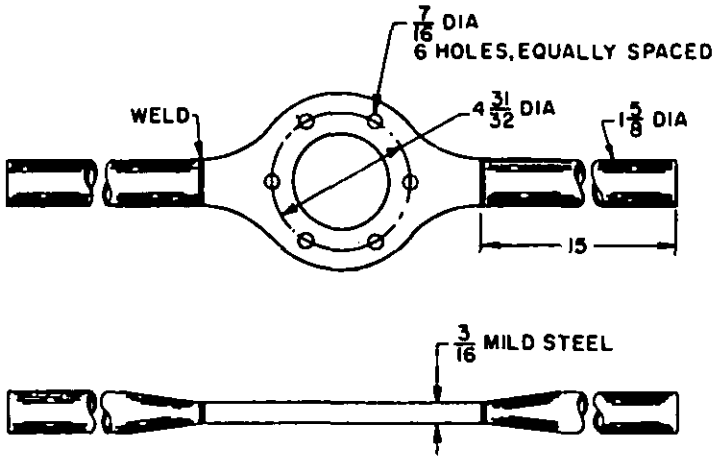

Figure 27. Tool for use with twisting machine

5. PRE-ASSEMBLY OPERATIONS

5.1 Removal of filling. If rosin is used for filling, dents and wrinkles should be removed while the filler is in the guide, but not otherwise. Use a flatting hammer with curvature corresponding to the shape being formed

5.1.1 Alloy method. After bending and twisting, immerse the guide in a tank of hot water at 82°C to 93°C (180°F to 200°F), (corrosion-resisting steel tank preferred), and allow the alloy to run out. Do not use a torch. Tilt and shake the guide to remove the alloy as completely as possible. Plunge the emptied guide (while still hot) into cold water for 2 minutes to solidify any small drops of alloy retained in the oil film. To remove the oil film and remaining solid particles of alloy, flush the guide with a cold grease solvent (such as Oakite No. 23, or equivalent), then use a tight-fitting material and pull it through the guide.

5.1.2 Rosin method. Remove both plugs and tilt the guide, using a chain hoist if desired.

CAUTION

ALWAYS REMOVE BOTH PLUGS BEFORE MELTING OUT THE ROSIN.

Using a torch adjusted for moderate heat, apply heat to the bottom end of the guide until the rosin begins to flow, then gradually raise the torch along the guide. After the guide is clear, direct the flame through the interior to remove remaining particles of rosin. It is not necessary to melt all the rosin. The tendancy is for the surface of the rosin to melt, permitting chunks to slide out of the guide.

WARNING

NEVER APPLY HEAT TO THE MIDDLE OF A GUIDE THAT IS FILLED WITH ROSIN. AN EXPLOSION WILL RESULT.

5.2 Removal of dents and wrinkles from waveguide. Dents and wrinkles should be removed from the waveguide after the filler has been removed (if the filler is rosin, imperfections may be removed from the waveguide while the rosin is in place). Dents are removed from an empty guide as follows:

(a) Seal the guide in the usual way at both ends and fit one end with a valve.
(b) Fill the guide with air pressure of about 28 pounds per square inch (p.s.i.)

CAUTION

THE AIR PRESSURE MUST BE CLOSELY WATCHED AS PRESSURE EXCEEDING 30 P.S.I. WILL BULGE THE GUIDE.

(c) Heat the area around the dent with a torch and remove the dent by means of a flatter. A blow torch should not be used on magnesium waveguide as magnesium material will support combustion after the ignition temperature has been reached.

5.3 Cutting. Cut the waveguide with a hacksaw or a powered metal cutting saw.

5.3.1 Hacksaw. For soft metal waveguides, use a fine tooth blade (10 to 14 teeth per inch). For copper or copper alloy, the guide can be cut with a blade having 20 to 24 teeth per inch.

5.3.2 Power saw. A recommended blade for cutting brass waveguide is the Simmonds T-11 steel blade, or equivalent. It is to be driven at approximately 1,200 revolutions per minute (r.p.m.).

5.3.3 Squareness of cut. The cut should be square and at right angles to the length of the guide. The edges must be filed or ground smooth so that the ends do not deviate from squareness by more than 1/32 of an inch. All filings, chips, and other bits of metal must be removed from the guide before inserting the waveguide into the flange.

5.3.4 Modification of flanges and heavy wall waveguides for proper fit. There are two ways of modifying the pieces to assure proper fit.

5.3.4.1 Cover flange. Machine the heavy wall waveguide down to the size of the standard waveguide so that it will fit into a standard choke flange (see figure 28).

5.3.4.2 Choke flange. Machine the alignment cutout of the choke flange to accept the heavy wall waveguide (see figure 29).

5.4 Cleaning. Prior to brazing, cleaning is required to remove surface contaminants, such as grease, oil, oxide film, dust and metal particles, from the filler and the parts to be brazed. The cleaning procedure in NAVSHIPS 0967-000-0110, Section 5-14, shall be followed.

6. ASSEMBLY

6.1 Attachment of flanges. The parts to be assembled shall be thoroughly clean. Avoid the use of emery paper or crocus cloth to clean contact surface of the guide and the flange. All cleaning shall be done to the methods described in NAVSHIPS 0967-000-0110, Section 5-14. The flanges are then torch-brazed, silver-soldered, or dip-brazed. A contact flange shall not be used as a cover flange in a choke coupling; see MIL-W-3970 for the correct mating cover flange. Alignment of the waveguide and flange is important to minimize mismatch and reflection losses.

6.1.1 Assembly of contact or cover flange to waveguide. When installing contact or cover flanges to a waveguide, the following method should be used:

(a) The surfaces to be brazed must be thoroughly clean (see 5.4).

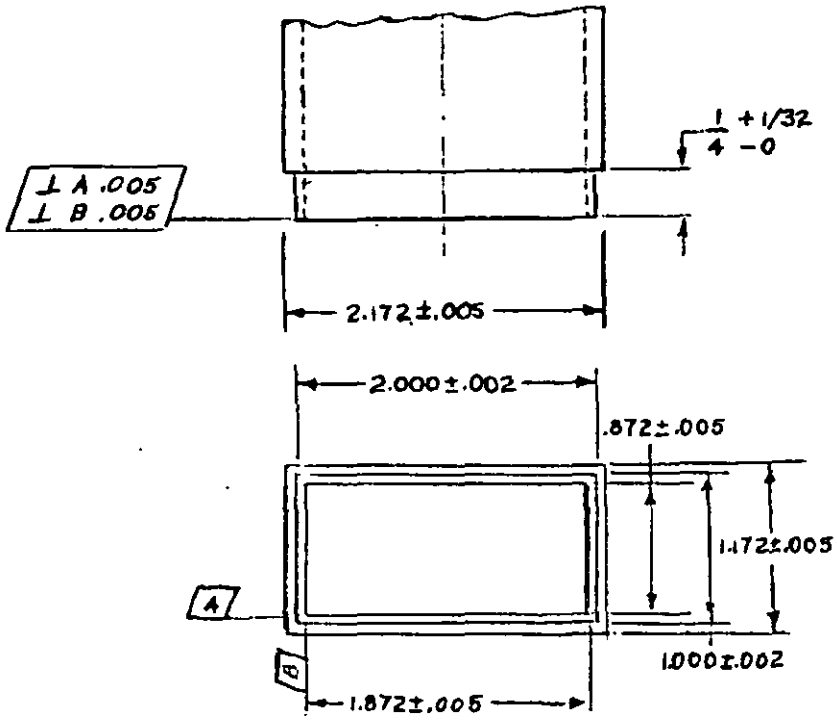

Figure 28. Modifying standard RG-95/U heavywall aluminum waveguide for use with standard UG-406 A/U choke flange

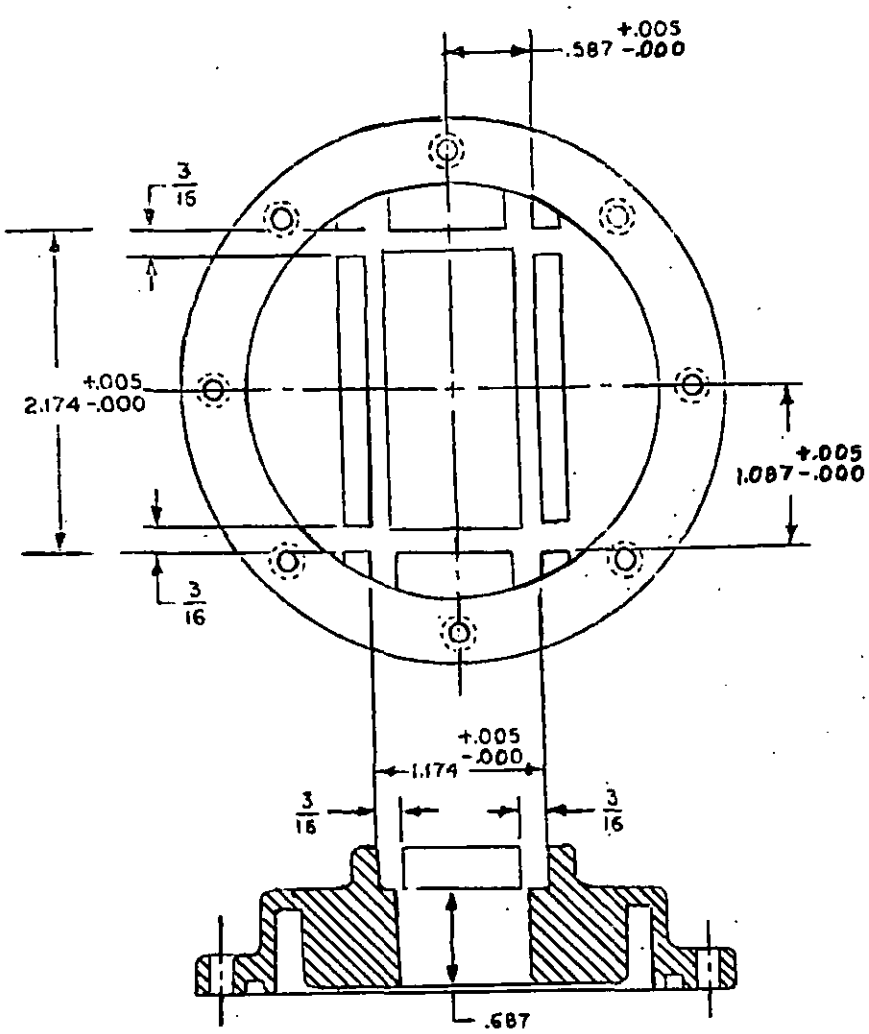

Figure 29. Modification of standard UG-406 A/U choke flange for use with standard RG-95/U heavywall aluminum waveguide

(b) For brazing brass flange to brass waveguide, apply silver solder flux over the surface areas to be joined (Handy and Harmon, or equal, flux thinned with water to the consistency of paste, free from lumps or type B brazing flux conforming to O-F-499). For brazing aluminum flange to aluminum waveguide a flux that will produce maximum flow of filler metal is Alcoa No. 33, or equivalent.

WARNING

THE FLUX IS POISONOUS. AVOID INHALING.

(c) Slide contact or cover flange over the guide to extend beyond the flat of the flange, allowing approximately 1/32 inch of waveguide to extend beyond the flat of the flange on all sides. See figure 30 for attachment of through flange on waveguide.

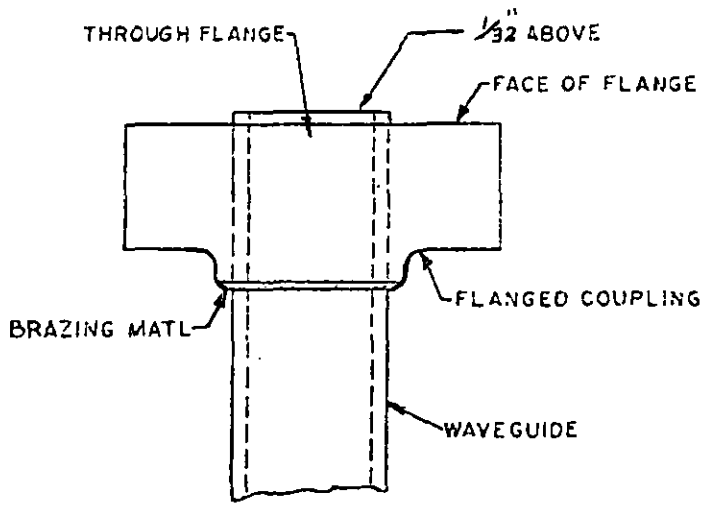

Figure 30. Through flange on waveguide.

(d) The bore of the flange shall be concentric with the waveguide bore to within 0.005 inch, (see figure 31). The flange face shall be perpendicular ±1/2 degree to the edge and side planes of the internal surfaces of the waveguide (see figure 32).

6.1.2 Assembly of choke or socket flanges to waveguide. When installing choke or socket flanges to the waveguide, the following method should be used (see figure 33):

(a) The surfaces to be brazed must be thoroughly clean (see 5.4).
(b) Repeat 6.1.1(b).
(c) The waveguide must be square in all three planes to within ±1/2 degree before assembly (see figure 34).

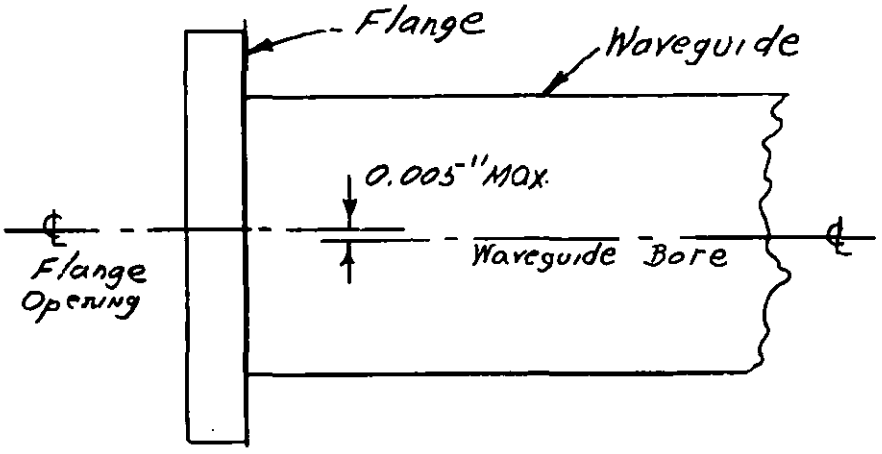

Figure 31. Concentricity of waveguide and flange

(d) The bore of the flange shall be concentric with the waveguide bore to within 0.005 inch (see figure 31).

6.1.3 Clamps and jigs. (See figures 35 and 36).

6.2 Silver brazing brass waveguide. Brass waveguide assemblies shall be brazed with a silver base alloy in accordance with QQ-B-654, grade IV or VI. After the parts to be brazed are properly clamped and fluxed, start preheating. A soft brush type flame (torch tip No. 6) should be used. Spread the flames of the air-acetylene torch as large as possible for heating evenly. However, if oxyacetylene is used there should be a sharply defined inner cone. Exercise extreme care in handling the waveguide while soldering to prevent buckling.

CAUTION

DO NOT USE SOFT SOLDER ON THE FACE OF THE FLANGE. SOFT SOLDER OXIDIZES WITH AGE AND MAY CAUSE A HIGH RESISTANCE JOINT.

WARNING

CONTAINS CADMIUM. BRAZING HEAT CAN PRODUCE TOXIC FUMES. USE IN ACCORDANCE WITH VENTILATION AND HEALTH REQUIREMENTS OF NAVSHIPS 0901-920-0003.

Apply heat to the flat surface of the flange as shown in figures 37 and 38. If oxyacetylene is used, the flame must be applied with the inner cone a few inches off the work. Heat the assembly sufficiently to melt the silver solder. Apply the silver solder to the surfaces to be brazed, (refer to figures 36 and 37). For a good joint, the liquefied solder must flow thoroughly and evenly between the guide and flange. Maintain adequate heat to melt the silver solder without applying the torch to the joint or solder. Insufficient heat

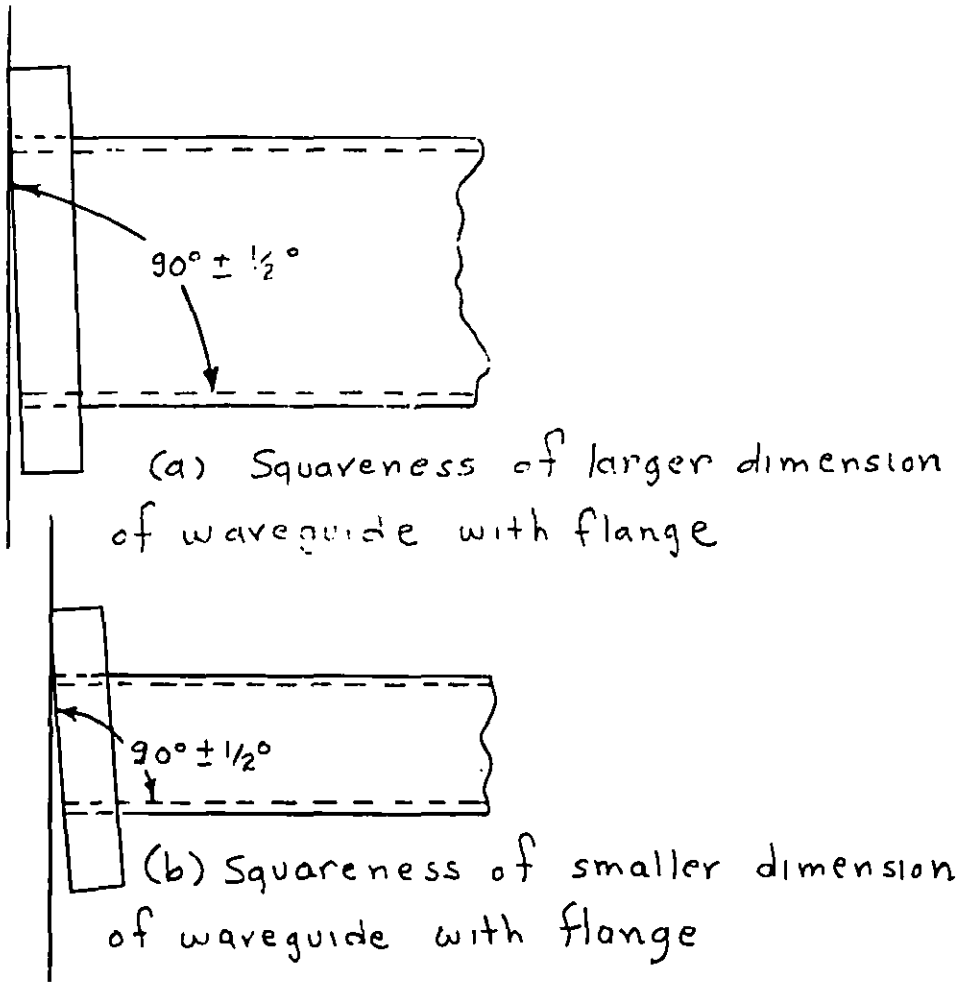

Figure 32. Squareness of flange face with waveguide

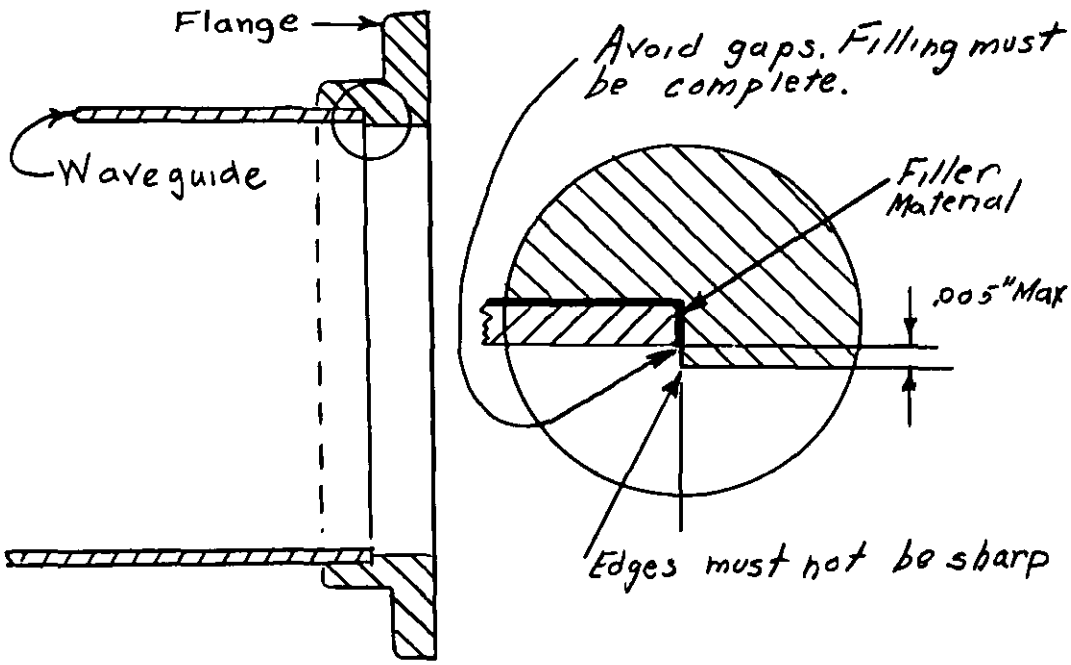

Figure 33. Waveguide and flange assembly-butt design

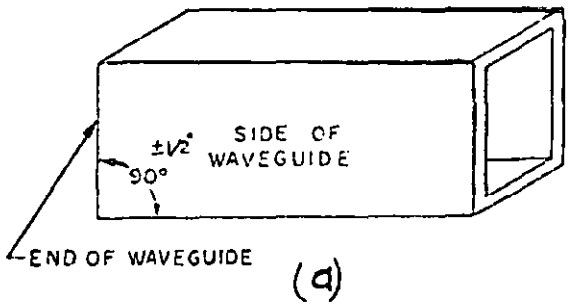

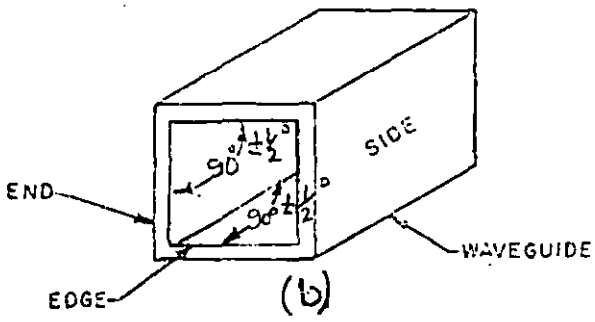

Figure 34. Waveguide squareness

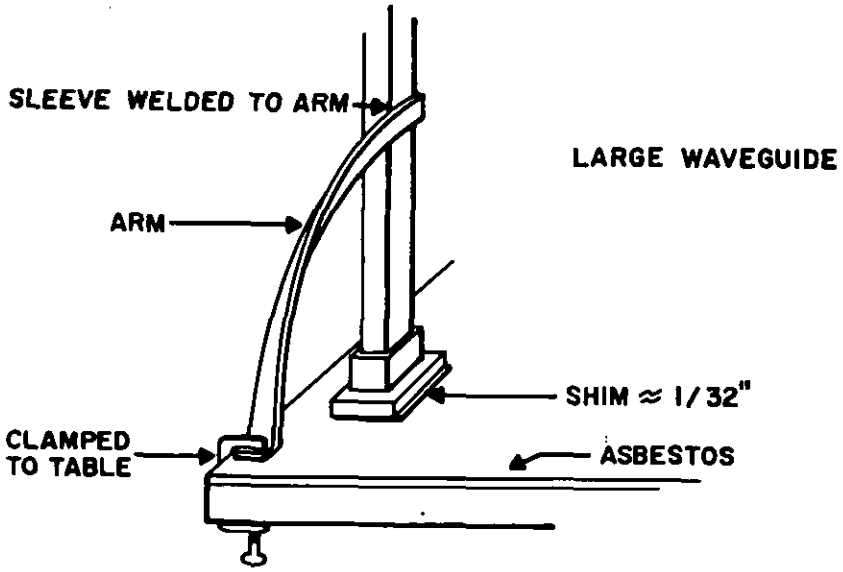

Figure 35. Torch brazing

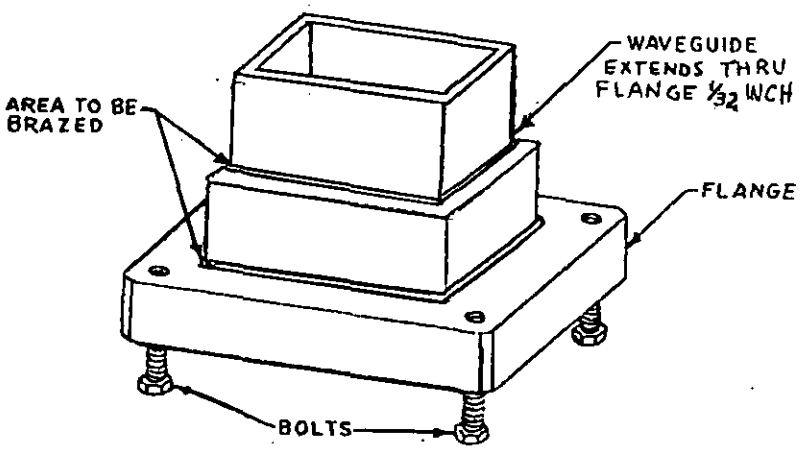

Figure 36. Jig for through flange

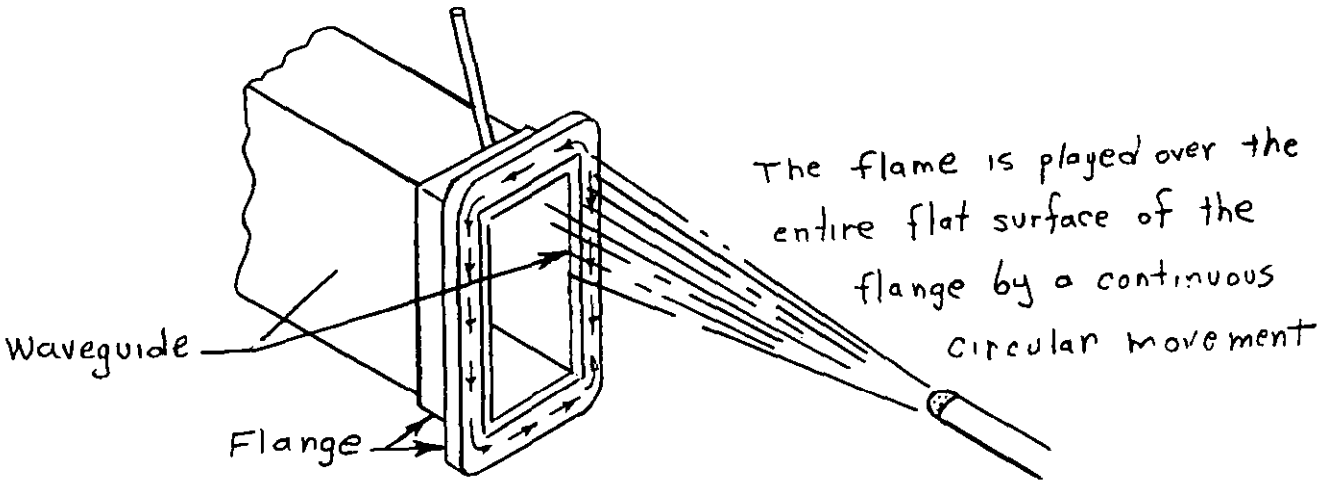

Figure 37. Silver soldering waveguide and flange-sleeve design

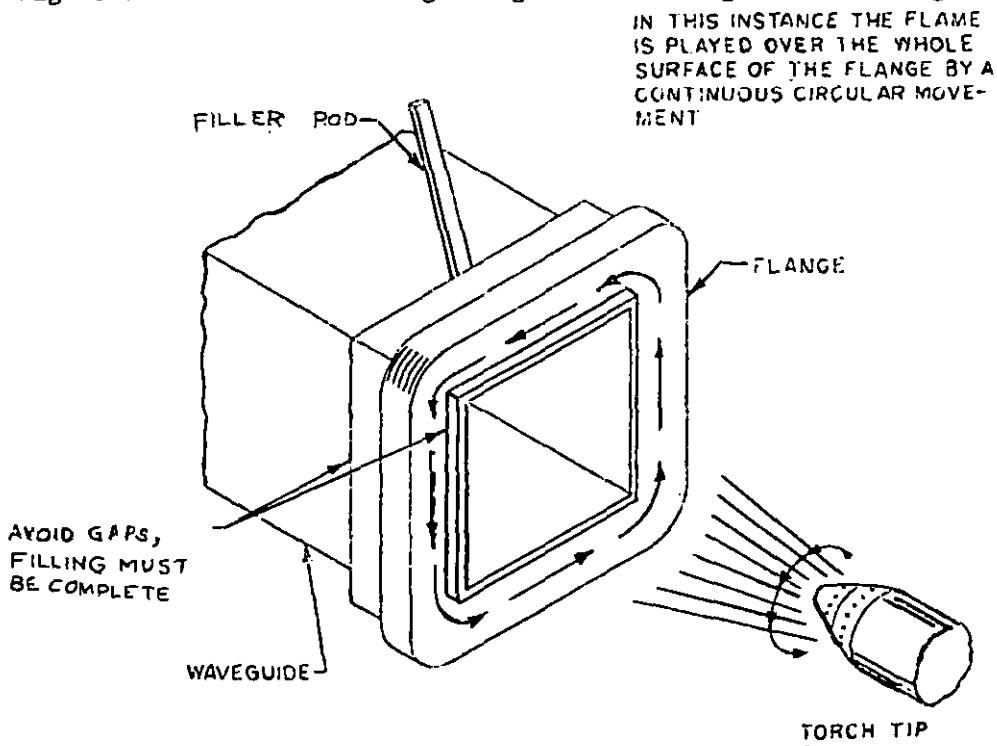

Figure 38. Directing flame on contact or cover flange

results in a weak joint and overheating burns the flux, warps the flange and causes oxidation. The guide and flange should be cooled in air without the use of forced cooling. Very carefully grind, file, or sandpaper flat flange and waveguide ends to a smooth surface approximately 63 microinches root mean square (RMS).

6.3 Brazing flanges on aluminum waveguide. The basic equipment and methods required for brazing aluminum flanges on aluminum waveguide are described below.

6.3.1 Torch tips (Numbers 1 to 5). The use of various size torch tips are determined by the thickness and size of the area to be brazed. The tips vary according to the size of their openings. The No. 3 tip is suggested for waveguide brazing.

6.3.2 Brazing rod. The main requirement for a good brazing alloy is that it melts at a low temperature to provide a practicable brazing range. Specifically recommended is FS- BAlSi-4 as specified in QQ-B-655, or Alcoa No. 716, or equal brazing rod, 1/16 inch thick - brazing range 512°C to 595°C (970° to 1085°F).

6.3.3 Brazing. Place the guide upright with the prepared end to be soldered on the bottom. Insert the waveguide through the flange so that 1/32 inch of guide extends beyond the face of the flange, preventing the solder from entering the guide. A suitable jig, such as four bolts threaded into the flange (see figure 36), can be used to keep the flange from its flat surface. After the parts to be brazed are properly damped or supported, apply the flux to the areas to be brazed and to several inches of the brazing rod. Use a No. 3 torch tip and adjust for "reducing" flame (oxygen starved flux). Apply heat to the parts to be brazed, keeping the torch in constant motion at all times for an even distribution of heat for proper fusion. When the flux dissolves into a liquid and becomes transparent, apply the brazing rod to the area to be brazed. The rod applied at one point only will flow around and seal the joint if the heat is properly distributed (see figure 39). Do not allow the flame to concentrate on one spot as it may burn the flux or melt the bare metal. Once the filled metal has started to flow into the joint the heat should not be increased. After the joint has cooled, all traces of the flux should be removed to prevent corrosion of the parts.

6.4 Dip brazing of aluminum waveguide.

6.4.1 Brazing flux. A recommended dip brazing flux is Aluminum Brazing Salt Pack Type "D", produced by Park Chemical Co., or equivalent.

6.4.2 Preparation of parts.

6.4.2.1 Cleaning. The cleaning directions given in 5.4 are to be used.

6.4.2.2 Exceptions. MIL-STD-645 must be followed except for the following:

6.4.2.2.1 Chemical dipping. Parts shall be dipped and rinsed in accordance with MIL-STD-645 except as follows:

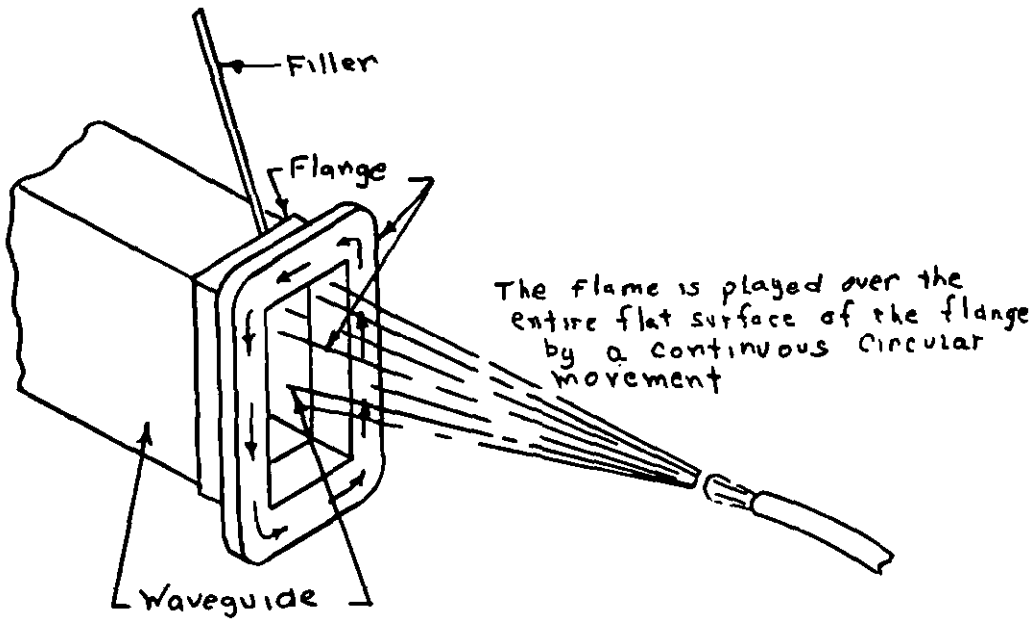

Figure 39. Brazing waveguide and flange-butt design

(a) Immerse parts in a nitric hydrofluoric acid solution maintained at room temperature for 30 to 60 seconds. The solution shall be prepared as follows:

Quantity	Composition
1 gallon	58-62 percent HNO_3(39'5'Be')
1/2 pint	48 percent HF (1 15 specific gravity)
9 gallons	water (room temperature)

(b) Dual cold water rinse in tanks with running water and constant overflow. Do not rinse in hot water.

6.4.2.2 Assembly. Parts shall be assembled in accordance with MIL-STD-645 and a mandrel, of sufficient size to ensure precise alignment of waveguide to flange, shall be inserted in the joint area and the flange inert gas-tack welded on two opposing corners to the waveguide prior to dip brazing. Heat resistant alloy wire, rod shims, jigs, clamps, perforated baskets, and so forth, shall be used to assemble the transmission line components for dip brazing.

6.4.2.2.3 Final cleaning. Parts shall be cleaned in accordance with MIL-STD-645 except soak for approximately 1 minute in a nitric hydrofluoric acid solution maintained at room temperature to remove all traces of flux particles (see 6.4.2.2.1(a)).

6.5 Dry air piping connection. For waveguide sections requiring the addition of fittings for dry air pressurization and purging, see figure 40 for details of construction and location. The inside of the waveguide shall be inspected following completion of fitting assembly; the surface shall be smooth, free of burrs and distortion.

6.5.1 These air connections shall be completed before final assembly of waveguide.

7. FINISHING OPERATION

7.1 Finishing operation. The finishing operation may require cleaning only. If the assembly requires smoothing, machining, or both, then cleaning, smoothing, and machining, or all three, and cleaning must be done in that order.

7.1.1 Cleaning waveguide. When fabrication is completed, each waveguide section must be carefully cleaned, (see 5.4). Smoothing and machining operations, if required, shall follow this cleaning.

7.1.2 Smoothing. The surface finish of the inside of the waveguide shall be sanded smooth, if necessary, by carefully using fine emery paper or crocus cloth. The average interior surface roughness shall be measured in accordance with USASI B46.1-1962 and shall conform to the specified requirement. Flaws shall not be included in the surface roughness. When measured, as specified above, the average interior surface roughness of the waveguide shall not exceed the values shown in table II, except the corner radius need not be included in the measurement.

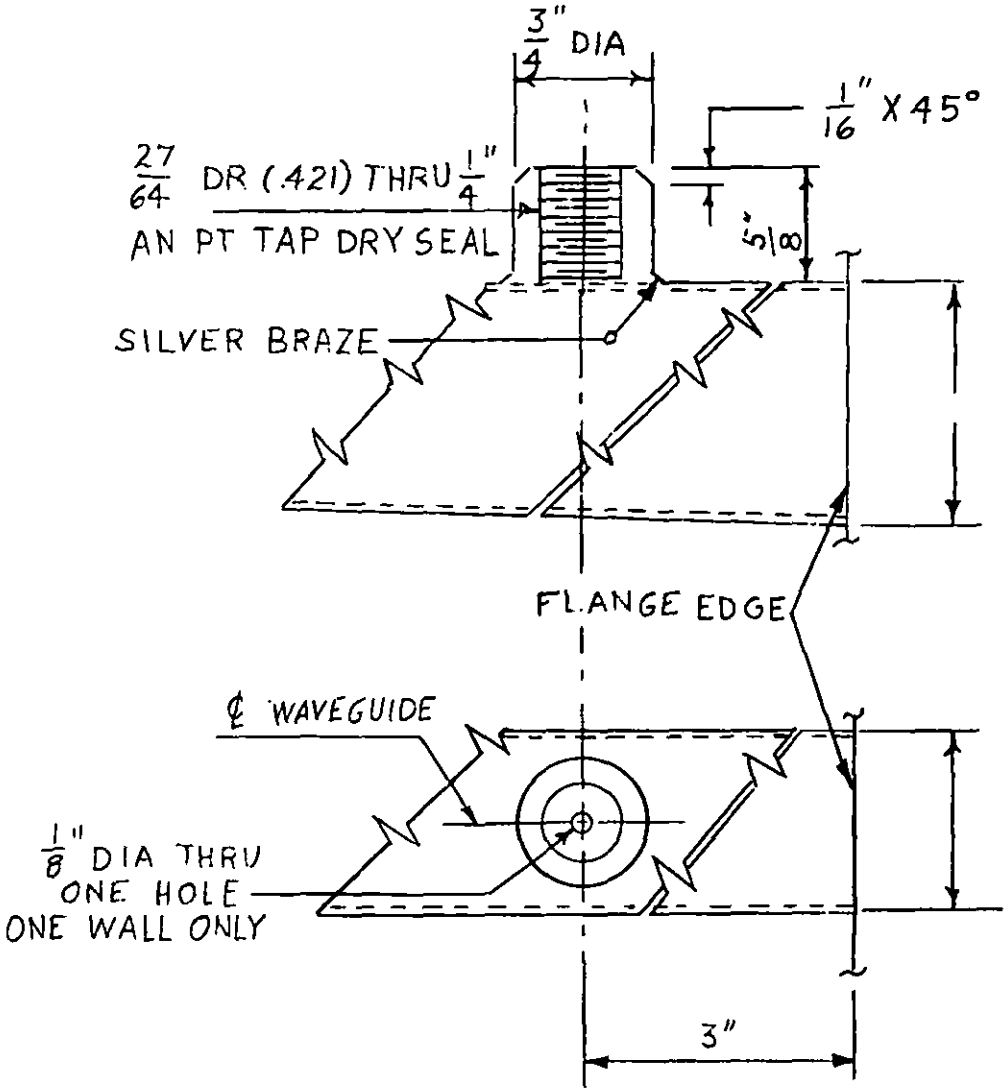

Figure 40. Fitting for air connection

Table II. Surface roughness tolerances of waveguides

Specified major inner dimension (inches)	Allowable surface roughness, maximum arithmetic average (A. A.)	
	Aluminum, aluminum alloy and magnesium alloy	Copper, copper alloy, silver alloy, silver lined copper and silver lined copper alloy
Up to 4, exclusive - - - - -	63	32
4 and over - - - - - - - - - -	125	63

The flatness and surface finish on the flange surfaces at and near the junction with the interior of the waveguide wall shall be the following:

(a) The flatness shall not deviate more than 0.002 inch per inch.
(b) Surface finish shall be as specified in table II.

Custodians:
Army - EL
Navy - EC
Air Force - 11

Review activities:
Army - ME, MU, MI, SL
Navy - SH
Air Force - 80,

User activities:
Army - AV, WC
Navy - AS,
Air Force -

Preparing activity:
NAVY - EC

(Project 5985-0725)

STANDARDIZATION DOCUMENT IMPROVEMENT PROPOSAL

OMB Approval No. 22-R255

INSTRUCTIONS: The purpose of this form is to solicit beneficial comments which will help achieve procurement of suitable products at reasonable cost and minimum delay, or will otherwise enhance use of the document. DoD contractors, government activities, or manufacturers/vendors who are prospective suppliers of the product are invited to submit comments to the government. Fold on lines on reverse side, staple in corner, and send to preparing activity. Comments submitted on this form do not constitute or imply authorization to waive any portion of the referenced document(s) or to amend contractual requirements. Attach any pertinent data which may be of use in improving this document. If there are additional papers, attach to form and place both in an envelope addressed to preparing activity.

DOCUMENT IDENTIFIER AND TITLE

NAME OF ORGANIZATION AND ADDRESS

CONTRACT NUMBER

MATERIAL PROCURED UNDER A

☐ DIRECT GOVERNMENT CONTRACT ☐ SUBCONTRACT

1. HAS ANY PART OF THE DOCUMENT CREATED PROBLEMS OR REQUIRED INTERPRETATION IN PROCUREMENT USE?
   A. GIVE PARAGRAPH NUMBER AND WORDING.

   B. RECOMMENDATIONS FOR CORRECTING THE DEFICIENCIES

2. COMMENTS ON ANY DOCUMENT REQUIREMENT CONSIDERED TOO RIGID

3. IS THE DOCUMENT RESTRICTIVE?

   ☐ YES ☐ NO *(If "Yes", in what way?)*

4. REMARKS

SUBMITTED BY *(Printed or typed name and address - Optional)*

TELEPHONE NO.

DATE

DD FORM 1 JAN 72 1426

REPLACES EDITION OF 1 JAN 66 WHICH MAY BE USED

S/N 0102-014-1802